This is a digital copy of a book that was preserved for generations on library shelves before it was carefully scanned by Google as part of a project to make the world's books discoverable online.

It has survived long enough for the copyright to expire and the book to enter the public domain. A public domain book is one that was never subject to copyright or whose legal copyright term has expired. Whether a book is in the public domain may vary country to country. Public domain books are our gateways to the past, representing a wealth of history, culture and knowledge that's often difficult to discover.

Marks, notations and other marginalia present in the original volume will appear in this file - a reminder of this book's long journey from the publisher to a library and finally to you.

Usage guidelines

Google is proud to partner with libraries to digitize public domain materials and make them widely accessible. Public domain books belong to the public and we are merely their custodians. Nevertheless, this work is expensive, so in order to keep providing this resource, we have taken steps to prevent abuse by commercial parties, including placing technical restrictions on automated querying.

We also ask that you:

+ *Make non-commercial use of the files* We designed Google Book Search for use by individuals, and we request that you use these files for personal, non-commercial purposes.
+ *Refrain from automated querying* Do not send automated queries of any sort to Google's system: If you are conducting research on machine translation, optical character recognition or other areas where access to a large amount of text is helpful, please contact us. We encourage the use of public domain materials for these purposes and may be able to help.
+ *Maintain attribution* The Google "watermark" you see on each file is essential for informing people about this project and helping them find additional materials through Google Book Search. Please do not remove it.
+ *Keep it legal* Whatever your use, remember that you are responsible for ensuring that what you are doing is legal. Do not assume that just because we believe a book is in the public domain for users in the United States, that the work is also in the public domain for users in other countries. Whether a book is still in copyright varies from country to country, and we can't offer guidance on whether any specific use of any specific book is allowed. Please do not assume that a book's appearance in Google Book Search means it can be used in any manner anywhere in the world. Copyright infringement liability can be quite severe.

About Google Book Search

Google's mission is to organize the world's information and to make it universally accessible and useful. Google Book Search helps readers discover the world's books while helping authors and publishers reach new audiences. You can search through the full text of this book on the web at `http://books.google.com/`

THE MANCHESTER ASSOCIATION OF ENGINEERS
ESTABLISHED
185

THE MANCHESTER ASSOCIATION OF ENGINEERS
ESTABLISHED
1859.

3-VDA
Manchester

TRANSACTIONS,

1894.

PUBLISHED BY THE ASSOCIATION.

MANCHESTER
HERALD & WALKER, PRINTERS, POOL FOLD CHAMBERS, OFF CHAPEL WALKS.
1895.

THE NEW YORK
PUBLIC LIBRARY
879714A
ASTOR, LENOX AND
TILDEN FOUNDATIONS
R 1937 L

CONTENTS.

1894.

	PAGE.
Index	—
List of Plates	—
Inaugural Address by the President, T. Daniels	1
Steel and its Manufacture, by H. Webb	17
Manufacture of Aluminium, by W. S. Sample	65
Application of Hydraulic Machinery to the Manchester Trade, by Gilbert Lewis	85
The Cost of Steam Raising, by John Holliday	117
The Modern Development of the Gas Engine, by Jas. Atkinson	153
Prepayment Gas Meters, by Jos. Nasmith	181
Annual Report of Council, 1894	212
Appendix: Description of Manchester Corporation Electric Works and Hydraulic Power Station.	

INDEX.

1894.

ADAMSON, J., on Aluminium, 77.

ADDRESS OF PRESIDENT, T. Daniels, on The Silver Question in relation to Engineering and estimating for Mechanical Work, 1.

ALUMINIUM, MANUFACTURE OF: Paper on, by W. S. Sample, 65.—Manufacture, 65.—Use of sodium, 66.—Cryolite, 66.—Aluminium reduction, 67, 68.—Time of aluminium charge, 68.—Impurities in aluminium, 69.—Electric current in aluminium, 69.—Bauxite, 70.—Corundum, 71. Price of aluminium, 73.—Ore of aluminium, 74.—Output of aluminium, 74.—Use in steel castings, 75.—Mitis castings of wrought iron, 75.—Aluminium in cast iron, 75; in copper, 75; in brass, 76.—Malleability of aluminium, 76.—Shrinkage of aluminium, 76.—Strength of aluminium, 76, 77.—Cooking utensils, 77.—Discussion, 77.—Reply, 81.

ANNUAL REPORT OF COUNCIL.—Amendment of Rule 13, 211.—Annual Meeting, 211.—Report, 212.—Additions to Membership, 212, 213, 214.—Members deceased, 213.—Members erased, 213.—Meetings held, 214.—Papers read, 215.—Kilgour and Roberts Assistance Fund, 216.—Manchester Ship Canal: congratulatory resolution, 217.—Anniversary dinner, 218.—Library, 222.—Opening of session, 224.—Obituary: R. Dack, 227; J. Hick, 227; H. Mainwaring, 228; W. H. Malkin, 229; E. Mitchell, 229.—Excursions: visit to Sheffield, 229; visit to Liverpool via Ship Canal, 232; visit to Prescot, 232.—Treasurer's General Cash Account, 236; Superannuation Fund Account, 237.

ASHBURY, T., on Steel, 63.—on Aluminium, 80.—on Hydraulic Power, 114.—on Steam Raising, 146.—on Gas Engines, 174.—on Prepayment Meters, 205, 206.

ATKINSON, J., Paper on the Modern development of the Gas Engine, 153.

BOLAS, J., on Steam Raising, 142.

BOSWELL, S., on Inaugural Address, 13.—on Steam Raising, 145.—on Gas Engines, 166.

CANNELL, T., on Hydraulic Machinery, 107.

COLLIER, C. H., on Aluminium, 78.

CONSTANTINE, E. G., on Gas Engines, 171.

CRAVEN, J., on Steam Raising, 140.—on Gas Engines, 170.

DANIELS, T., Inaugural Address, 1.—Remarks on Steel, 63.—on Aluminium, 77, 79, 83.—on Hydraulic Machinery, 107.—on Steam Raising, 134, 140.—on Gas Engines, 164, 173.—on Prepayment Meters, 204, 207.—on Rule 13, 211.—Annual Meeting, 211.

DIXON, S., on Aluminium, 78.

DOBSON, B., on Steel, 63.

DONALDSON, J., on Hydraulic Machinery, 108.

FOWLER, W. H., on Aluminium, 79.

FULTON, D., on Gas Engines, 167.—on Prepayment Meters, 207.

GAS ENGINE, MODERN DEVELOPMENT OF: Paper on, by Jas. Atkinson, 153.—Three typical diagrams of three epochs of the "Otto" Gas Engine are illustrated showing the great reduction in gas consumption during the last fourteen years, 154.—The "Differential" and "Cycle" Gas Engines invented by the author described, 155.—The reasons for the recent greatly improved consumption in the "Crossley" Otto Engine explained and shown to be mainly due to the scavenging arrangements for getting rid of the burnt gases entirely, 157.—The means employed for this purpose described, being a recent invention by Mr. Crossley and the author, 157.—Particulars of brake tests given showing a consumption as low as 16·487 cubic feet per effective horse power, not much more than half the amount required originally, 163. Discussion, 164.—Reply, 174.—Diagrams, 7 plates.

GEM, W., on Aluminium, 79.

GUTHRIE, H., on Gas Engines, 167.

HARTLEY, J., on Aluminium, 80.—Steam Raising, 135.

HIGGINSON, J., on Gas Engines, 173.

HODGSON, H., on Steam Raising, 144.

HOLLIDAY, J., Paper on Cost of Steam Raising, 117.

HYDRAULIC MACHINERY, APPLICATION OF, TO THE MANCHESTER TRADE: Paper on, by Gilbert Lewis, 85.—Introduction, 85.—Bramah, the inventor of the Hydraulic Press, 85.—History and introduction of the various hydraulic machines at present in Manchester, 86.—Pumping engines, 87.—Direct-acting pumps, 87.—Duplex pump, 88.—Gas engine, 88.—Accumulator, 89.—Intensifier, 89.—Central hydraulic powers, 93: London, 94; Birmingham, 95; Liverpool, 95; Manchester, 95.—Meters, 97.—Comparison of working costs, 97.—Conclusion, 100.—Appendix: Conditions of supply and regulations for the guidance of makers of hydraulic apparatus for connection to the hydraulic mains of the Manchester Corporation, 101.—Quarterly scale of charges for hydraulic power supplied by meter, 105.—Discussion, 107.

JENKINS, W. J., on Hydraulic Machinery, 110.—on Gas Engines, 164.

JOHNSON, H., on Inaugural Address, 13.

LEWIS, GILBERT, Paper on Application of Hydraulic Machinery to the Manchester Trade, 85.

LISTER, R. R., on Aluminium Seamless Tubes, 79.—on Steam Raising, 146.

MARSHALL, E., on Steam Raising, 140.

MELDRUM, J., on Steam Raising, 141.

NASMITH, J., on Steam Raising, 137.—Paper on Prepayment Meters, 181.

PREPAYMENT METERS: Paper on, by Mr. Jos. Nasmith, 181.—Introduction, indicating the causes, causing the adoption of prepayment gas meters, 181.—Attachments, description of: J. Stewart Wallace, 185; Brownhill, 186; Thorp and Marsh, 188; Cowan, 190; Braddock, 192; Sawer and Purves, 194; Parkinson, 196; Glover's, 197.—Various mechanical features to meet difficulties in practice, 198.—Stop index meters, 201.—Steps taken to popularise the use of gas, 202.—Charges made, 202.—Extra consumption resulting from adoption of prepayment meters, 203.—Discussion, 204.—Diagrams, 9 plates.

SAMPLE, W. S., Paper on Manufacture of Aluminium, 65.

SAXON, A., on Steam Raising, 134.—on Gas Engines, 169.—on Rule 13, 211.

SCHLIFFER, F., on Steam Raising, 144.

SETTLE, T., on Steam Raising, 142.

STEAM RAISING, COST OF: Paper on, by J. Holliday, 117.—Introduction 117.—Cost of steam raising considered as a factor in the cost of steam power, 117.—Effect of a constant load in reducing the cost as compared with a varying load, 117.—Division of the total cost of steam raising under the heads of fuel, working expenses, maintenance and capital charges, 118.—Selection of the cost of evaporating 1,000 gallons of water as the basis of comparison, 119.—The effect of various temperatures of feed water and pressure of steam, 122.—Cost of fuel, 120.—Cheap and inferior fuels compared with better qualities, 121.—The apparent economy and the drawbacks of inferior fuels, 121.—Description of the plant on which the author's experience in cost of working is founded; the fuel used, 122, and the cost of the same to evaporate 1,000 gallons.—The weekly fuel bill for normal, special and average weeks, 123.—Stokers' wages and hours on duty, night and Sunday work, 124.—Superintendence, 124.—Removal of Refuse, 125.—Flue sweeping and boiler cleaning, 125.—Cost of water and purification of the same, 126.—Illumination of the boiler house, 127.—Stores, 127.—Steam used for auxiliary engines, 127.—Maintenance of boilers, furnaces, brickwork of flues and furnaces, feed pumps,

economiser, &c., 128.—Insurance of boilers and buildings, 129.—Capital expenditure on boilers, &c., buildings and chimney, interest and depreciation, rent of site, taxes, &c., 129.—The total cost per week, and per 1,000 gallons evaporated, and the relative proportion of each, 131.—The costs per week, and per 1,000 gallons evaporated of the steam made in the forced draught and natural draught boilers respectively, 132.—Table showing number of British thermal units in one pennyworth of fuel of various qualities and prices, 133.—Discussion, 134.—Diagram.

STEEL AND ITS MANUFACTURE: Paper on, by Henry Webb, 17.—Introduction, 17.—Steel, 17.—Alloys of steel, 21.—History of steel, 24.—The manufacture of steel, 32.—Direct processes, 34.—Ancient Cementation process, 36.—Crucible process, 38.—Bessemer acid process, 42. Open hearth acid process, 47.—Open hearth and Bessemer basic processes, 49.—Saniter process, 55.—Soaking pits, 56.—Ingots, 57.—Rolling, 58.—Forging, 58.—Conclusions, 58.—List of illustrations, 61. Vote of thanks, 63.

TAYLOR, JOHN, on Steam Raising, 136.—Rule 13, 211.

WALTHEW, J., on Address, 13.—on Rule 13, 211.

WEBB, H., Paper on Steel, 17.—Remarks on Hydraulic Machinery, 114.

WEST, J., on Compressed Air, 114.—Prepayment Meters, 204, 205.

LIST OF PLATES.

To illustrate "Application of Hydraulic Machinery to the Manchester Trade." Page 116.

Plate 1. Wilson's Patent Direct-acting Pumping Engine.
" 2. Dack's Intensifier.
" 3. Bellhouse Hydraulic Intensifier.
" 4. Differential Accumulator.
" 5. Direct-acting Intensifier.
" 6. Three throw Triple Expansion Pumping Engine, end view.
" 7. Do. do. do. side view.
" 8. 6in. Balanced Service Valve.
" 9. 1½in. Momentum Valve.
" 10. Manchester Hydraulic Power Supply.

To illustrate "The Cost of Steam Raising." Page 150.

Plate 1. Diagram.

LIST OF PLATES.

To illustrate "The modern development of the Gas Engine." Page 178.

Plate 1. Three comparative Diagrams from the early and latest modern Gas Engines.
,, 2. Diagrammatic figures showing the action of Atkinson's Differential Engine.
,, 3. Diagrammatic figures showing the action of Atkinson's Cycle.
,, 4. Section of improved Crossley Otto Engine.
,, 5. Do. do.
,, 6. Explanatory Diagrams of improved Engine.
,, 7. Do. do.

To illustrate "Prepayment Meters." Page 208.

Figure 1. Ancient Automatic Mechanicism.
,, 2. Stewart Wallace do.
,, 3. Brownhill do.
,, 4. Modification of do.
,, 5, 6, 7. Thorp and Marsh do.
,, 8. Cowan do.
,, 9, 10. Braddock's do.
,, 11-16. Sawer and Purves. do.
,, 17-18. Glover's do.

INAUGURAL ADDRESS

BY THE PRESIDENT,

Mr. T. DANIELS, M.I.Mech.E.,

DELIVERED SATURDAY, 13TH JANUARY, 1894.

The first duty of the President being to prepare his address for the first meeting of the new year, he usually finds it rather difficult to choose a subject unless he selects a mechanical one; but, having no discussion it appears to be the best plan, in my opinion, that such subjects should be dealt with by separate papers.

It being entirely a President's night, he might give a historical address and review the past, but as all this information should be well known, it is perhaps better that we should consider questions more in regard to the present and future.

At one time, I thought I could give a very good biographical address, taking for the subject the life of Nasmyth and his inventions, notably the steam hammer, shaping machine, slot drill and the milling machine, also his patent safety ladle for casting purposes. With Nasmyth might have been included his partner, Mr. R. Wilson, who invented many mechanical appliances (more particularly pumping engines and cotton presses); at the same time, I might have described also the tools and contrivances for labour saving schemed out by Tooth, Nuttall and Milward, members of this Society years ago, these men having helped, in a great measure, to establish the reputation of Nasmyth, Wilson & Co., Patricroft. With this firm I have had the pleasure of holding a responsible position for some years, and have had every opportunity of seeing and admiring these inventions and mechanical appliances. On reflection I decided to take for my subject, on this occasion,

The Silver Question in Relation to Engineering and Estimating for Mechanical Work.

Last year you will remember we advocated very strongly Boards of Conciliation, and as was to be expected these Boards

have been the means of settling several trade disputes, more especially the great coal strike, the effects of which we are yet feeling very acutely, and shall do so for some time. A gentleman in Bombay wrote me the other day that "Trade is bad enough already, and we do not want it worse owing to the short supplies of coal from England. This strike is opening up new fields, and now large shipments of coal are on the way from Japan; Bengal coal is also being largely used on steamers and in our local factories." So the coalowners and colliers will suffer considerably by losing their trade in that part of the globe.

Now, what is keeping the trade of the world in such a bad state? There are scarcely any orders for locomotives, machinery or railway material in the market, and everywhere business seems at a deadlock or uncertain. We may be able to construct the best machinery and goods of all kinds, but if we can get no sale for them we shall be starved out; yet workmen must have a living wage and the unemployed must have employment. As we all seem to be looking for the cause of this, but can come to no definite conclusion it appears to me that it must be the Silver question, and the sooner we are all bi-metallists the better. The Currency question at the present time has set many minds thinking, and forms the subject of many Parliamentary debates.

The quantity of money in circulation, or which is available for Bank Reserves, has so obvious a bearing upon the price of the commodities which it measures that a system of currency which is, if not contracting, at least non-expansive, cannot fail to create apprehension in the minds of those whose capital is invested in productive industry whether textile or mechanical. That this is the present condition of our currency is asserted by authorities we are all bound to respect.

Until the year 1873 there is no doubt that the monetary system of the world was composed of the two precious metals, gold and silver, which had for so long been joined together at a fixed ratio as to perform the function of money throughout the world without any distinction between them. The practical effect of this was that the accumulated mass, as well as the annual production of both metals, were available for currency

purposes, and that the valuation of everything capable of being bought or sold was based upon the volume of gold and silver in circulation as Money. In other words, "prices" were merely an expression of the relation of any particular commodity to the money of the world.

But since 1873 all this has been changed. The closing of the French Mint to silver in that year combined with the fact that Great Britain had already discarded silver as unlimited legal tender brought about the demonetization of silver as "international money"—*i.e.*, reduced silver from its historical position of money to a mere commodity measurable from day to day by gold. The effect of this has been an alteration, or rather a series of alterations, of prices to the standard afforded by one precious metal instead of two. In other words, gold being by law and by modern usage the final standard of measurement, the gold value of commodities has been determined by a smaller volume of money, and prices have inevitably fallen with a tendency which, under present conditions, must continue downwards.

It is hardly correct to say that the price of a commodity is fixed by the quantity of it which gold will buy. It is rather a question of how much of any particular commodity must be given by the producer to obtain the gold which he needs, because all industrial enterprise is saddled with fixed charges which have to be paid in gold whether the results of industry are prosperous or the reverse. The industrial capitalist is the last to receive remuneration for his work and risk. Before he has anything for himself, either interest or profit, he must pay in full his rent, taxes, wages, railway carriage, depreciation of machinery, and a host of smaller items which he cannot escape. Many of these fixed charges are actually or practically obligations extending over terms of years, and the industrial capitalist cannot get any equitable abatement even if he is losing money. Therefore, if the Currency system is one which automatically causes prices to fall, the industrial capitalist is bound to suffer the loss first of all, and if such losses recur year after year without any prospect of avoiding them it is not surprising that the march of industrial enterprise should be arrested, or that

people should try to withdraw their capital from it. Appreciation of gold, which has been continuous for twenty years, causing a continuous fall in prices is bad enough, but the fact that more than half the world still uses silver as money and can only pay in silver, makes matters worse for those who have to regulate their cost of production to a narrowing gold basis. A few figures will illustrate this. Suppose a Company in Mexico invests 10,000 dollars in machinery it would only return to the producers in Great Britain some £1,125 at the present exchange of 2/3 per dollar.

If Exchange	were	2/6	it would	return	£1,250
,	,,	2/9	,,	,,	£1,375
,,	,,	3/-	,,	,,	£1,500
,,	,,	3/6	,,	,,	£1,750
,,	,,	4/-	,,	,,	£2,000

or, looking at it the other way, if I lay down machinery in Mexico at a cost of £1,000, I must obtain 8,888 dollars for it to cover the sterling cost at the present exchange of 2/3 per dollar.

If Exchange	rose	to 2/6	I could	afford to	sell it for 8,000	dollars.
,,	,,	2/9	,,	,,	7,288	,,
,,	,,	3/-	,,	,,	6,888	,,
,,	,,	3/6	,,	,,	5,712	,,
,,	,,	4/-	,,	,,	5,000	,,

Down to the year 1873 Exchange stood at 4/- per dollar, so that it can be easily seen how much more of his money (all other things being equal) the buyer in Mexico has to pay to balance the fall in the gold value of his silver dollar.

Now these silver using countries with which we trade so largely, cannot always afford to pay the increased quantity of silver money which we require to cover the cost in gold of a particular piece of machinery. On the contrary, all experience shows that having a certain amount of their silver money to spend they wait until the gold value in England has fallen to the equivalent of what they can afford to pay; *i.e.*, the burden of adjustment to the so-called fall in the value of silver has fallen, not upon the consumer abroad, but upon the producer at home. It seems, therefore, imperative that the British Government should, in the interest of British industry, endeavour to

form a monetary union with the leading commercial nations of the world, under which both the precious metals shall rank as international money for international purposes. This is a simple definition of that Bi-metallism of which we hear so much now-a-days. It is the only solution of a great problem, because it puts on one side temporary expedients and recognizes existing facts, and seems to offer the only way out of a difficulty which presses most seriously upon British industry, and which may, if allowed to drift, result in disaster to British commercial and industrial prosperity.

The continued fall in the gold price of silver is, it is stated, stimulating the development of foundries and other iron and machine works in silver using countries, where all charges and wages are paid in silver. Mexico and Japan, and even China, are particularly said to be going ahead in this respect. In the last named (China) there are reports that the blast furnace plant, which has been so long in course of erection, is now nearly completed, and we have to remember that in some of these countries not only labour but fuel is exceedingly cheap. Hostile tariffs in many countries shut us out, but one great market, India, is free. Now the Iron trade has long grumbled at the slow development of India by railways. We have seen within the last few weeks Liberal and Conservative statesmen admitting that the Indian Government is almost in a condition of bankruptcy, and everyone knows that this is due to the fall in silver. It needs nothing but a plain reading of the facts to see that until there is a fixed relation between gold and silver money restored, not by artificial means but upon a sound economic basis, the Government of India cannot go in for that great development of our Dependency which its vast population and natural wealth demand, and what the Government dare not do on account of present currency conditions private enterprise naturally fights shy of. If gold and silver moneys were once more linked together as they were up to twenty years ago, many authorities say that India alone would provide twenty years constant work for the Iron trade of this country. That vast continent, or series of continents, as it may be described, with its 300,000,000 people, has only about 18,000 miles of railway.

With a settled currency on the above lines the Government and private enterprise could and would widely spread railways and other works, creating a demand for rails, bridgework, engines, and all other rolling stock and accessories, while more steamers, with all their equipment, would be called for.

To sum up this Currency Question let me say that we depend upon International Trade, and it is essential that the two money metals of the world should have an international status so as to facilitate the trade of Great Britain with every part of the globe. But very few people will take the trouble to understand the why and wherefore of this intricate question, and thousands of working men do not know that it exists; it is a grand chance for the leaders of labour and the leaders of the unemployed to fill up their time between strikes and disputes, educating their followers so that they can realize its importance and work both in and out of Parliament accordingly. In Foreign business the work contracted for is F.O.B. at one of our British seaports, so this ignorance is not to be wondered at. In fact very few workmen understand anything about estimating for work, and the extra expenses to be charged over and above their actual wages; it is immaterial to them so long as their portion is ready every pay day, the ups and downs of the employer being little thought of; the workman can hardly realize that every contract taken has had to be carefully worked out, and what risks the capitalists are compelled to undertake. For this reason, I thought after introducing to your notice very briefly the money question, I would make a few remarks appertaining to estimating. There are two kinds of estimating, by calculation and by instinct; by instinct, I mean those who buy what they trade in by carefully looking at it and then deciding at once to give so much per ton, or so much for the lot and the bargain is made. Some men have this instinct or gift to such an extent that they can tell to a trifle weights of material or what length of time it will take to complete certain work. But in engines and machinery it is more difficult and must be done by calculation, and at times the results obtained by different contractors vary, say in a £2000 contract from 10 to 15 per cent., large contracts varying much more; take for in-

stance our Ship Canal, original estimate £8,000,000, cost about £15,000,000. In looking up the old contracts and costs of the original railways there is a great difference. The Suez Canal, as far as I can ascertain, was the greatest work of the kind that was completed for about the sum specified, and in the time stated to finish the work. Recently, we have seen great works completed such as the Severn Tunnel, Mersey Tunnel, Forth Bridge; and what variation there has been in the cost! But while it is so difficult to get at the cost it seems very remarkable that, as Mr. Dixon informed us in his able address, the expansion and other variations calculated on in the construction came out almost exactly to the measurements given. Although the cost of boring the Mont Cenis Tunnel was considerably under-estimated, the system on which the contractors worked from each side was calculated to such a nicety that the borers came very near centre to centre with each other when they met in the middle of the work. Most large works and contracts are made public, but it is difficult at times to obtain the results sent in for smaller contracts. I know of a case some two years since when an English firm estimated £82,000 for work specified and a French contractor secured the order for £82,050, which proves that sometimes results are very close together, even when you compete with a foreigner. Makers of specialities have a very pleasant time of it, as they by repetition and scheming so reduce the cost of their articles that they can send to a customer their price lists with the understanding that there will be the usual discount and other deductions allowed. Working on these lines we are told the Americans are the better able to compete for work; possibly, this is the reason why they are able to undersell us in the South American and other markets. Their experience has taught them that certain standards of engines will suit nearly all ordinary railways made, and they go on making, on stock, and have no expensive drawing office or staff to be kept up to get out estimates for work. By this means, their per-centage of cost for manual labour is reduced, as in all business and work the man's wages forms the base of all estimates. In the cotton trade for

a penny cost you must put a penny on; while, in the coal trade it was explained to us during the late strike that to obtain the coal cost about 3/- per ton, another 3/- being put on for expenses; in the iron and steel trades they estimate similarly. Our Lancashire boilermakers have brought their system of working and estimating to such perfection that estimates sent in from five makers for a given size of boiler will not vary more than a £10 note. But our general Engineers and Locomotive Makers do not have a very happy time of it, which I can testify from experience. Suppose an advertisement appears in *The Engineer* for five tank locomotives for Mexico; particulars of the railway, its curves and inclines, will be given at an office; designs must be made to specification; cost for each engine and earliest delivery stated, subject to a penalty of £20 per week or for a part of a week if this date is exceeded. Assume that ten firms in this country compete for this order, the London representatives call and get the information and forward it to their firms, and a draughtsman if necessary will then have to go to make drawings. This means ten representatives being roused up to work and ten draughtsmen going up to London, besides letters being written both ways. The firms having got particulars required, a design is worked out by them separately; this being fixed upon, each drawing office drafts out the quantities, and the weights of the different materials are given, so that the actual cost of all material can be ascertained for certain plates and forgings. Perhaps six sets of sketches will have to be made for quotation purposes, so that we have ten firms each sending out about twenty enquiries for prices of material to make up the estimate, which means, at least, a total of 200 letters, necessitating 200 replies. Then each kind of material made by the firm is taken out, the cost of boilermaking, machine work, pattern making, fitting and erecting, painting, packing, carriage to the seaport specified, all of which must be calculated in detail. In the course of a few days the estimates are sent in, the same being followed up by the firms' representative. Now we see the expense these ten contractors have incurred in getting up this estimate, which taken generally will amount to about £50

each, or a total of £500. And after all this trouble and expense it is very likely the American representative will send in his standard engine which will be accepted, the more readily because he can take the Mexican paper or silver, getting paid through an American bank—the English contractors having to be paid on the gold standard through a London bank.

It would be interesting to know the amount of money spent in useless estimating for work by Mechanical Engineers alone during the year; this amount of money, of course, has to be included in the working expenses of the concern.

The locomotives I have mentioned will each take the following material in their construction, speaking generally:—

260	cwt. of	steel plates
20	,,	iron ,,
36	,,	brass tubes
26	,,	copper plates
18	,,	brass castings
56	,,	steel ,,
66	,,	iron ,,
94	,,	steel forgings
12	,,	iron ,,
120	,,	smith's ,,
42	,,	sundries

total 37 tons 10 cwt. rough material, costing about £900 when material is at an average price. When the engine is completed it will weigh about 32 tons nett, thus losing in manipulation about 5 tons 10 cwt. of material, or say 17 per cent. of the total weight in the following proportion:—

Steel plates - - -	7	per cent.
Copper plates - - -	15	,,
Framing plates - -	45	,,
Iron castings - - -	15	,,
Steel castings - - -	14	,,
Steel and iron forgings - -	18	,,
Machined parts of motion -	22	,,
Black work, slightly machined	6	,,

All this material is subject to all kinds of tests according to the particular specification of each chief or consulting engineer

and has to give results of a very high standard. Now, how the American makers contrive to evade inspection and specification I am unable to say, but I presume they are more honest than English makers, and so can be fully trusted in their work and material.

After the Material comes the cost of workmanship and other expenses which will amount approximately to another £900, making a total of £1,800 for the price of the locomotive f.o.b. Manchester or Salford. In Mexico it will be worth 16,000 dollars. The cost of workmanship has to be carefully watched and kept down to the lowest point consistent with good work; as, before mentioned, it forms the basis of all other expenses. Locomotive work has to be sub-divided and systematised, so that men get well accustomed to the different parts which enables them to earn good wages and balances working at a fair rate. General shops and tool makers all do their best to work on the most economical system, and adopt the most modern appliances for executing work.

The smithy must have some good hammers, suitable for forging and blocking the parts where possible.

The boiler shop must have efficient multiple drilling machines for certain parts, also rimering, tapping, and other special machines for this class of work. The boiler being completed in the boiler shop is handed over to the mounters, who with with small facing machines, get up all the joints, fix the mountings, put in the tubes, and make it complete for the water and steam test, when it is passed on to the erectors.

A moulding shop only for Locomotive work does not require to be of large dimensions, as so much cast steel is now used. These steel castings can be bought cheaper from special makers, but still the moulder wants the best and handiest kind of boxes and light cranes for moving about his work, and also having a good quick traveller for the heavier casts.

The smith's work is better set out, and tried over in the smithy to ensure it being right for the marking table, as work taken back and forwards so many times for alterations has a demoralizing effect, not to mention the extra cost.

The parts being sent in to the machine shops, they are set out

and machined, then passed on to the fitters, who fit up their several jobs to drawing, gauge and templet, and they are then sent in to the erectors, or to a store until required.

The machine shops are the most important, as the more accurately and quickly the machines do their work greater impetus is given to every other department. Special machining for certain parts is a necessity, and milling is of great importance, also special machines for brass mountings. The foremen of the machine shops must be continually on the alert, scheming and experimenting with special tools for expediting the work, and to keep the machines running to the full pitch of their cutting speeds. The best tool steel should be employed, as an inferior quality keeps the machines standing, while at the same time changing the tools is a great loss in a week's time. I have found none equal to Mushet's for any kind of material, and it gives a nice blue colour to the planings from a cast steel hornblock cutting at a speed of 24 feet per minute.

The lapping out is an expensive operation, and there are several lapping machines in use, but none can equal the hand lapping in my opinion, as the machines have a tendency to make the holes taper, and spoil the fit of the pins.

As each shop finishes its work as much as possible the erectors have very little adjusting of parts, so that almost any kind of locomotive, except a Fairlie double bogie, can be erected and stripped and passed to the painter and packer in from four to five weeks.

Having described the working of a Locomotive contract shop briefly, I wish to point out the importance of men and foremen thinking over in their own minds, and estimating in their own way the cost of their work. It shows the necessity of having fixed prices for each job throughout every department, as unless this is the rule the employer cannot estimate and get his price anything near to the actual value, to compete with others.

There is another serious item to be taken into consideration, that being the percentage of spoiled work and bad material. When you have done your best with castings and forgings defective places will appear, especially in case hardening, unless very mild steel is used; but this material is not to be compared

with the best Yorkshire iron, as you cannot penetrate with hardening to the depth necessary. In iron, you can harden a bare $\frac{1}{8}$ deep, and in mild steel bare $\frac{1}{16}$, only, with Yorkshire iron you have strength and hardness combined; with the steel hardened, pins and thin parts of motion links are liable to break. We have not been able to invent yet a process of hardening that can be done without heating the parts—and it seems a cruel process that after you have machined and fitted up such nice work it should have to be put in a furnace and heated from 12 to 20 hours, and then to be cooled and twisted in all directions. If some chemist would invent some powerful liquid that would penetrate the iron with, say, boiling and not to pit or corrode the surface in any way, he would very soon make his fortune. Until this happens we must keep to the old process, and run the risk of the extra expense. I find the percentage from defects vary. Sometimes you have better luck and get through with 2 % per engine. And in locomotives where the Yorkshire iron is used throughout, and all working surfaces case-hardened besides the motion parts (the larger the machine the more risk from defects and men making mistakes) the percentage will be more than 10 %.

Having now explained briefly the methods of estimating for mechanical work and the necessity of having a fixed cost for the same, it removes the old prejudice that workmen had against piece-work formerly, as in those days some employers would keep cutting away at the men's prices when there was no cause for it as they could get a fair price and make a good profit out of their manufactures.

Having fixed prices for the work enables the first-class man to make a good wage, the moderate man a fair one, and the slow man at least to earn his day wages and make 15 % for himself, and as a man's labour is his capital invested a dividend of 15 % over and above his ordinary earnings may be considered a "living wage."

The quicker the orders are turned out the better it is for both man and master, and when labourers work by the piece they are more energetic in getting the material from place to place to expedite delivery.

If we can by any means bring about the coming of those good times we all want, and our Statesmen and Commercial men can agree as to the Silver question being settled on a popular basis, we shall have a steady exchange and avoid those great crashes that come about from over-speculation, by which makers of machinery have contracts suspended or cancelled after thousands of pounds have been paid on the work and for the material supplied. . When the value of silver is so unsettled the financial basis of small Republics and other states are disturbed and it checks trade, as while one is waiting for the fall, the other person is waiting for the rise, so between them there is no business done.

Now I think this question of Bi-Metalism is one for us to consider very carefully as we see how it affects our own trade, and I feel sure if we cannot come to any definite understanding as to the why and wherefore in our own minds, we cannot do better than follow those who do know, and with having Sir W. Houldsworth and other commercial champions leading the cause we cannot do wrong in supporting them.

On the motion of Mr. S. Boswell, seconded by Mr. H. Johnson and supported by Mr. James Walthew, a cordial vote of thanks was passed to the President, which he briefly acknowledged, and the proceedings terminated.

STEEL AND ITS MANUFACTURE.

READ SATURDAY, 24TH FEBRUARY. 1894,

BY

MR. HENRY WEBB,

BURY.

Introduction.

There are doubtless several persons in this room who know more about this subject than I do, and to them it must seem somewhat egotistical that I should attempt to write a paper on it; but I hold it to be the duty of every member to do what he can for the good of the Association, either by the reading of papers, sending communications, or introducing new members, &c., and thus practically showing his interest in its operations. My subject is really a continuation of the paper I had the pleasure of reading to this Association in 1891, and this I feel to be somewhat of a difficulty for there are some here who were not with us then, and it is not desirable to go over the same ground again.

The subjects of steel and iron are really one for they are both made from the same ore, and the processes of manufacture are in many cases exactly the same. I would also ask your indulgence if what I have to say in some parts seems too elementary, since to treat a subject thoroughly we must "begin at the beginning," and it seems desirable that this Association should have placed amongst its transactions a paper on this subject.

What I have to say will be divided into three parts:—

1. Steel and its Alloys.
2. The History of Steel.
3. The Manufacture of Steel.

Steel.

The literature of steel is very extensive, the papers and volumes which have been written on this subject forming

of themselves a library. Nevertheless, the science and art of steel making is not yet perfect. The varieties of steel in commerce are exceedingly numerous, but the causes of difference are in many cases unknown, and the investigation of those causes is attended with great difficulty. Even such an apparently simple point, as the presence in steel of certain simple elements in minute proportions such as nitrogen, silicon, sulphur, phosphorus, very sensibly modify the properties of steel, and yet chemists say the accurate quantitive determination of these elements, when combined or in association with large masses of iron is one of the most intricate problems.

It is difficult to define the exact limit between wrought iron and steel, and the difficulty is increased by the indefiniteness of our nomenclature. So great has this difficulty been felt that at the International Exhibition held at Philadelphia in 1876 a commission was appointed comprising the most eminent metallurgists of all countries to agree upon a nomenclature, for hitherto what one man would call steel, another said it was iron and *vice versa*. This commission agreed upon the following :—

"All malleable compounds of iron similar to the substance called wrought iron shall be called weld iron; that compounds similar to the substance hitherto known as puddled steel shall be called weld steel; that compounds which cannot be appreciably hardened when placed in water while red hot shall be called ingot iron; and that compounds of this latter which from any cause are capable of being tempered shall be called ingot steel."

Thus the difference between wrought iron and steel is chiefly seen in their behaviour when raised to a high temperature and suddenly cooled by being plunged into water, when wrought iron undergoes little if any change; while steel is rendered almost as hard as diamond, and so brittle that it snaps off if an attempt be made to bend it. If this very hard brittle steel be again heated to a temperature far short of redness and cooled, it becomes much softer than before and extremely elastic, so that when forcibly bent, it springs back into its former position, whereas wrought iron would retain a permanent bend. This property of being hardened by chilling is dependent upon the presence of carbon in the metal, for chemically pure iron does

not exhibit it, and of all compounds none are to be compared with those of carbon in practical importance; and in a scientific point of view none possess greater interest. The influence of this element in causing variation in the physical properties of iron, is one of the most extraordinary phenomena in the whole range of metallurgy. When carbon is absent, or only present in a very small quantity, we have wrought iron which is comparatively soft, malleable, ductile, weldable, easy forgeable, and very tenacious. It is not, however, fusible except at temperatures rarely attainable in furnaces, and not susceptible of tempering like steel. When carbon is present in certain proportions we have the various kinds of steel which are highly elastic, malleable, ductile, forgeable, weldable, and capable of receiving very different degrees of hardness by tempering, even so as to cut wrought iron with facility, and fusible in furnaces. When present in greater proportion than in steel we have cast iron, which is hard and comparatively brittle, and readily fusible, but not forgeable or weldable. The differences between these three well known metals thus essentially depend upon differences in the proportion of carbon, though other elements do concur in modifying the qualities of these metals. Ours has been said to be an iron age, but we may now say it is a steel age. Whether we call it steel or iron no other metal has contributed so largely to the civilization and happiness, and in view of warlike events may we not also add, paradoxical as it may seem, to the misery of mankind. But let us not forget that carbon has done its share in this good and evil work. Iron containing as much as two parts of carbon in a 1000 of metal (not 100) would be so decidely hardened by chilling as to be termed a steely iron, and a slight increase in the quantity would produce a mild steel, such as the homogeneous metal of which cannon and armour plates are forged. A proportion of carbon amounting to three parts in 1000, is contained in the Bessemer steel rails, and in the steel of which spades and hammers are commonly made. Twice this proportion of carbon or six parts in 1000 is contained in steel ramrods, and the steel employed for tools commonly contains 10 or 12 parts in 1000. When the carbon amounts to 14 in 1000 the steel becomes more fusible and resembles white cast iron.

Bar iron which contains only a minute proportion of carbon, has a tensile strength of from 21 to 26 tons per square inch, but when the proportion of carbon amounts to three or five parts in 1000, its tensile strength is increased, 40 to 45 tons per square inch, while it is still soft enough to be easily punched, or drilled and flanged. The steel for engineers tools requires a force of 70 tons and upwards per square inch to break it.

In addition to hardness and increased tensile strength, the presence of carbon confers another valuable property upon iron, namely, the capability of retaining magnetism. "When a bar of soft iron is placed in contact with a magnet, or in the axis of a coil of wire through which a galvanic current is transmitted, the iron bar acquires all the properties of a magnet, becoming capable of attracting iron filings, and if freely suspended of pointing like a compass needle North and South. It loses these magnetic properties as soon as the permanent magnet is removed, or the galvanic current is discontinued in the surrounding wire. A bar of steel however would retain its magnetic properties, consequently the hardest steel is selected for permanent magnets, and it has been noticed that the addition of the metal tungsten to steel increases its power of retaining magnetism." Steel is void of the fibre so characteristic of wrought or bar iron. When cast in a fluid state into a malleable ingot it has a bluish grey colour with a tinge of brown; in cast steel it is usually considered that the bluer the shade in colour the better the metal. The fracture of a steel ingot of hard temper should show a shiny silky appearance, not dull and leaden looking, nor containing bright specs embedded in a dull matrix. The specific gravity of steel is from 7·622 to 7·813. In heating, greater care is necessary than with iron, and in welding, the surfaces must be freed from scale or oxide by the use of borax, instead of the sand used in welding wrought iron.

Its melting point is about 1800° C., and is between that of pig iron and wrought iron; it is less oxidizable on exposure to air and moisture than is malleable iron. You must all have been interested when very young in watching a blacksmith temper a chisel or other tool. The chisel is first heated and then suddenly plunged into cold water, the surface being then polished and a little heat applied. With access of air, films of

oxide form on the surface of the steel, giving rise to a succession of colours as the temperature rises or falls; from these colours the workman determines the temperature of the temper of his work. The shades which successively appear as the steel is gradually heated are light straw colour, dark straw, golden yellow, brown, purple, violet, and blue. The first corresponds to a temperature of about 220° C. giving the hardest temper, such as is required in tempering razors, &c., while deep blue or the temper given to saws, corresponds to a temperature of about 320° C. Articles of steel that require tempering are forged and finished working while in their soft state and subsequently tempered.

Alloys of Steel.

Steel alloys readily with many other metals, and a great deal has been written on this subject of late years. I can only glance at a few of the principle alloys.

Copper, in not too large proportions, alloys with steel with the production of a substance harder than steel, but very red short.

Silver will only alloy in very small proportions.

Gold and Platinum, alloy readily with steel, but have little practical application.

Manganese, in the form of spiegeleisen or ferro manganese is largely used, and is a most useful alloy. Mons. Gautier, of Paris, and Mons. Pourcel, of Terre Noire, say "that the blow holes in steel castings are caused by bubbles of carbonic oxide, imprisoned during the solidification of the steel at the very moment when they were being expelled from the mass. The use of sillicide of magnanese will prevent this."

Manganese increases the welding capacity of steel, and gives the steel greater tenacity when hot, so that it may be heated to a greater heat without afterwards cracking under the blow of a hammer or the tension of the rolls.

Mr. Hadfield, of Sheffield, says "the addition of manganese to steel in small quantities has but slight action on its strength and ductility. 2·5 per cent. of manganese increases its hardness and strength, but ductility is diminished. Five and six per

cent. increase the strength and toughness, but diminishes the hardness, the maximum of strength and toughness is reached when the percentage of manganese is 15."

Silicon. If the percentage of carbon is small, the presence of silicon appears to increase both the toughness and malleability. The amount of silicon in the steel which gives the best results is about 2 per cent., the carbon being below 0·2 per cent. But unlike manganese no further addition of silicon will effect a return of strength; when the percentage exceeds six, the steel is red short.

Mr. Seebohm, of Sheffield, says "silicon is more dangerous than manganese. It causes the steel to crystallize in smaller crystals, it materially assists its capacity to receive a high polish, it increases its soundness but makes it more brittle."

Tungsten or Wolfram is itself infusible, but can be used as an addition to ordinary steel, forming a rich alloy. In the form of a metallic alloy it is used to a considerable extent in the manufacture of special steel, the general effect being to render the steel intensely hard and brittle; it is frequently made so hard that it does not require to be hardened. It is very difficult to forge, and requires handling with the greatest care, it must be shaped at one forging and then ground to the form required. It cannot be welded when the amount of tungsten exceeds two per cent. It is unfit for tools subject to shock, such as rock drills, chisels, and hammers, but for turning tools, which in consequence of the temper of the steel not being liable to injury by heat, can be driven at a higher speed than usual, it is very useful. It is specially adapted for standard gauges. Special steel of this kind is the finest grained that can be produced.

Chrome is sometimes used instead of tungsten; it increases the hardness and the tensile strength and elastic limit, but lessens the weldability.

Mr. Webb, of Crewe, says "Springs made of chrome steel are superior to those made of ordinary spring steel, and I am gradually replacing all the springs on the London and North Western Railway system with this material."

Mr. Hadfield says "chrome does not confer soundness, and in this respect differs from silicon and aluminum, and except for special classes of work it is difficult to see the foundation

for the advantages that have been put forward by some for its employment."

Aluminum. A few years ago there was great excitement in the iron and steel world about the use of this alloy, it being confidently stated that it lowered the fusion point of iron, and that in a little while when the price of aluminum was lowered we should see wrought iron run into moulds, no more forgings would be required they would be a thing of the past, and our hammers, &c., would have to go to the scrap heap. Like many other predictions the time of fulfilment has not yet come.

Mr. Hadfield and Dr. Osmond contradict the statement that aluminum lowers the fusion point of iron, but their reasons are too long to introduce here. They say "aluminum slightly increases the breaking strain and the elastic limit in rolled steel, and in cast steel up to not more that one per cent., when further additions do no more good. As it renders the steel more crystalline, anything beyond small additions is undesirable for castings, and for the same reason it is not desirable to use it at all for large castings, having considerable thickness of metal. It is useful because of the greater fluidity of the steel where castings with comparatively thin metal are to be run. The quicker cooling here prevents an undue development of crystalline structure, and practice and experience ensure satisfactory tests. Contraction cracks are more liable to occur with this steel unless the temperature of the castings be kept low."

Nickel. This alloy has probably a great future before it. Mr. J. Riley says " this steel is steady in the mould, more fluid and thinner than ordinary steel, and appears to be thoroughly homogeneous, and no extraordinary care is required when rolling and hammering. The quality of hardness obtains as the nickel is increased until 20 per cent. is reached, when a change takes place. Tests have been made showing elastic limit 54 tons, breaking strain 95·6 tons, extension in four inches 9·37 per cent., contraction of area 49·2 per cent. Steels rich in nickel are practically non-corrodible, and those poor in nickel are much better than other steels in this respect. The alloy up to five per cent. of nickel can be machined with moderate ease. One per cent. of nickel welds fairly well, but this quality deteriorates with each addition of nickel. It has been tested

satisfactorily for deep stamping and flanging, and the quality of non-corrodibility, together with its strength both elastic and ultimate, renders it useful in all cases where cost of material is of minor importance. In these days of high pressures of steam, what possibilities are there with a metal having an ultimate strength 30 per cent., and elastic limit 70 per cent. higher than those of weld steel with nearly equal ductility and less corrosion?" If also armour plates can be produced as castings and the various shapes required in ships can be satisfactorily made by this alloy there is a great future before it.

Sulphur and Phosphorus are enemies of good steel. "Damaskeening is the name applied to the method of producing brown colouration and figuration of gun barrels, sword blades, &c.; it is produced by the action of various acid solutions on the metal, and is considered to be due to the unequal corrosion or solvent action of the liquid upon the metal with the depression of films of carbon, &c., on various parts."

The History of Steel.

On this part of the subject I shall be brief, although many may think it would be the most interesting. The pioneers and inventors of the iron industry were of necessity the inventors of the steel industry, and I referred to some of these in my paper on iron. Both iron and steel are frequently mentioned in the Bible, but it would be superfluous to quote from all the allusions in the earlier scriptures; and, indeed, it would form a paper of itself to comment to the full upon the many-sidedness of the references themselves. It is sufficient to show from these allusions that about 1,500 B.C., or at the time when Moses is commonly computed to have written, the properties of iron and steel had been so well observed, and the practical uses so well understood, that by means of these properties and uses, there was found in it a very ready symbol or comparison for the exposition of many parabolic allusions.

Gen. iv. 22. "Tubal-cain an instructor (sharpener) of every articifer in brass and iron."

Lev. xxvl. 19. "I will make your heaven as iron." (Resistance.)

Num. xxxi. 22-3. "Only the gold and the silver, the brass, and iron, &c." (Intense purification.)

Deut. iii. 11. "His bedstead was a bedstead of iron." (First iron bedstead.)

Deut. iv. 20. "Brought you forth out of the iron furnace."

Deut. viii. 9. "A land whose stones are iron."

Deut. xix. 5. "His hand fetcheth a stroke with the axe."

Deut. xxxiii. 25. "Thy shoes shall be iron." (Firmness, stability.)

Joshua xxii. 8. "Return—with silver, with gold, and with brass, and with iron."

Job xxviii. 2. "Iron is taken out of the earth, and brass (copper) is molten out of the stone."

Job xx. 24. "He shall flee from the iron weapon and the bow of *steel* shall strike him through."

Psalms xviii. 34. "He teacheth my hands to war so that a bow of *steel* is broken by mine arm."

Jeremiah xv. 12. "Shall iron break the northern iron and the *steel*."

The process of converting iron into steel had long been known among the Eastern nations before it was introduced into Europe. It can be proved by the evidence of language, that the Aryans, before they separated, led the life of agricultural nomads, and that they knew of iron and steel. The Hindoos and Chinese were skilled in the art of making steel, and the Hindoos to this day are especially skilled in this art. It is supposed that the tools with which the Egyptians covered their obelisks and temples of porphyry and syinite with hieroglyphics, were made of steel, as probably no other metal was capable of executing such work. The art seems to have been well known in Germany in the middle ages, and the process is on the whole very faithfully described by Agricola in his great book on metallurgy published in Basle 1621. England then produced very little steel, and was mainly dependent for its supply of the article upon the continental makers.

From an early period Sheffield became distinguished for its manufacture of iron and steel into various useful articles. We find it mentioned in the 13th century as the place where the best arrowheads were made, the Earl of Richmond owing his success at the battle of Bosworth partly to their superior length, sharpness, and finish. The manufactures of the town became

of a more pacific character in the following centuries, during which knives, tools, and implements of husbandry became the leading articles.

Chaucer, in his Canterbury Tales written about the end of the 14th Century, shows the place had then become known for its manufacture of knives.

In 1575 we find the Earl of Shrewsbury presenting to his friend, Lord Burleigh, "a case of Hallamshire whittles, being such fruites as his pore countrey affordeth with fame throughout the realme."

In 1615 Sheffield contained not more than 2,207 householders, of whom one third, 725, were not able to live without the charity of their neighbours. These are all begging poor, says Hunter, the historian, and yet they continue the manufacture of knives, for we find the knife with which Felton stabbed the Duke of Buckingham, at Portsmouth, in 1628, was traced to Sheffield, for when examined it was found to bear the Sheffield Corporation mark. The manufacture of clasp or spring knives was introduced into Sheffield by Flemish workmen in 1650.

Many improvements were made from time to time in the material of which these articles were made. Instead of importing German steel as it was called, the Sheffield manufacturers began to make it themselves, principally from Dannemora iron imported from Sweden; the first English manufacturer of the article was one Crowley, a Newcastle man, and the Sheffield makers soon followed his example. The invention of cast steel is due to Benjamin Huntsman, of Attercliffe, near Sheffield, and we are indebted to M. L. Play, Professor of Metallurgy, Royal School of Mines, France, who after making careful inquiry and weighing all the evidence on the subject, arrived at the conclusion that the invention fairly belongs to Huntsman. And it is remarkable that a French writer should have been among the first to direct public attention to the merits of this inventor, and to have first published the few facts know as to his history. From this and other sources as detailed in Dr. Percy's "Iron and Steel," I have taken the following:—"Benjamin Huntsman was born in Lincolnshire, in 1704. His parents were of German extraction, and had settled in this country only a few years previous to his birth. The boy being of an ingenious

turn was bred to a mechanical calling, and becoming celebrated for his expertness in repairing clocks, he eventually set up in business as a clockmaker and mender in the town of Doncaster. He also undertook various other kinds of metal work such as the making and repairing of locks, smoke jacks, roasting jacks, and other articles requiring mechanical skill. He was remarkably shrewd, observant, and thoughtful, and practical, so much so that he came to be regarded as the 'wise man of the neighbourhood,' and was not only consulted as to the repairs of machinery, but also of the human frame. He practised surgery with dexterity, and was held in especial esteem as an occulist. His success was such that his advice was sought in many surgical diseases, and he was always ready to give it, but declined receiving any payment in return."

"In the exercise of his mechanical calling, he introduced several improved tools, but was much hindered by the inferior quality of the metal supplied to him, which was common German steel. He also experienced considerable difficulty in finding a material suitable for the springs and pendulums of his clocks. These circumstances induced him to turn his attention to the making of a better kind of steel than was then procurable, for the purposes of his trade. His first experiments were conducted at Doncaster, but as fuel was difficult to be had at that place he determined for greater convenience to remove to the neighbourhood of Sheffield, which he did in 1740. He first settled at Handsworth, a few miles to the south of that town, and there pursued his investigations in secret. Unfortunately, no records have been preserved of the methods which he adopted in overcoming the difficulties which he had necessarily to encounter. That they must have been great is certain, for the process of manufacturing cast steel of a first-rate quality even at this day is of a most elaborate and delicate character, requiring to be carefully watched in its various stages. He had not only to discover the fuel and flux suitable for his purpose, but to build such a furnace, and to make such a crucible, as should sustain a heat more intense than any then known in metallurgy. Ingot moulds had not yet been cast, nor were there hoops and wedges that would hold them together, nor in short were any of these materials at his disposal, which are now so familiar at every melting

furnace. Huntsman's experiments extended over many years before the desired result was achieved. Long after his death the memorials of the numerous failures through which he toilsomely worked his way to success, were brought to light in the shape of many hundredweights of steel, found buried in the earth in different places about his manufactory. From the number of these wrecks of early experiments, it is clear that he had worked continuously upon his grand idea of purifying the raw steel then in use by melting it with fluxes at an intense heat in closed earthen crucibles. The buried masses were found in various stages of failure arising from imperfect melting, breaking of crucibles, and bad fluxes, and had been hid away as so much spoiled steel of which nothing could be made. At last his perseverance was rewarded and his invention perfected, and though 100 years have passed away since Huntsman's discovery, the description of fuel which he first applied for the purpose of melting steel, and the crucibles and furnaces which he used, are for the most part similar to those in use at the present day. Although the making of cast steel is conducted with greater economy and dexterity owing to increased experience, it is questionable whether any maker has since been able to surpass the quality of Huntsman's manufacture."

"When Huntsman had perfected his invention it would naturally occur to him that the new metal might be employed for other purposes besides clock springs and pendulums, and it is probable that at an early stage of his investigations he shrewdly foresaw the extensive uses to which cast steel might be applied in the manufacture of tools and cutlery of a superior kind, and we accordingly find him early endeavouring to persuade the manufacturers of Sheffield to employ it in the manufacture of knives and razors. But the cutlers obstinately refused to work a material so much harder than that which they had been accustomed to use; foiled in his endeavours to sell his steel at home Huntsman turned his attention to foreign markets, and he soon found that he could readily sell abroad all he could make. The merit of employing cast steel for general purposes belongs to the French, always so quick to appreciate the advantage of any new discovery, and for a time the whole of the cast steel that Huntsman could manufacture was exported to France."

"When he had fairly established his business with that country, the Sheffield cutlers became alarmed at the reputation which cast steel was acquiring abroad; and when they heard of the preference displayed by *English* as well as French customers for the cutlery manufactured of that metal, they readily apprehended the serious consequences that must necessarily result to their own trade if cast steel came into general use. They then appointed a deputation to wait upon Sir Geo. Savile, one of the Members for the County of York, and requested him to use his influence with the Government to prohibit the exportation of cast steel. But on learning from the deputation that the Sheffield manufacturers themselves would not make use of the new steel, he positively refused to comply with their request. It was indeed fortunate for the interests of the town that the object of the deputation was defeated, for at that time Mr. Huntsman had very pressing and favourable offers from some spirited manufacturers in Birmingham to remove his furnaces to that place, and it is extremely probable that had the business of cast steel making become established there, one of the most important and lucrative branches of its trade would have been lost to the town of Sheffield."

"The Sheffield makers were therefore under the necessity of using cast steel if they would retain their trade in cutlery against France, and Huntsman's home trade rapidly increased. And then began the efforts of the Sheffield men to wrest the secret from him, for Huntsman had not taken out any patent for his invention, his only protection being in preserving his process as much a mystery as possible. All the workmen employed by him were pledged to inviolable secrecy, strangers were carefully excluded from the works, and the whole of the steel made was melted during the night."

"It is said that the person who first succeeded in copying Huntsman's process was an ironfounder named Walker. Walker adopted the ruse of disguising himself as a tramp, and feigning great distress and abject poverty he appeared shivering at the door of Huntsman's foundry late one night when the workmen were about to begin their labours at steel casting and asked for admission to warm himself by the furnace fire."

"One cold winter night while the snow was falling in heavy flakes, and the manufactory threw its red glare of light on the neighbourhood, a person of the most abject appearance presented himself at the entrance praying for permission to share the warmth and shelter which it afforded. The humane workmen found the appeal irresistable, and the apparent beggar was permitted to take up his quarters in a warm corner of the building. A careful scrutiny would have discovered little real sleep in the drowsiness which seemed to overtake the stranger, for he eagerly watched every move of the workmen while they went through the operations of the newly discovered process. How the unauthorised spectator of these operations effected his escape without detection tradition does not say, but it tells us that, before many months were over Huntsman's manufactory was not the only one where cast steel was made."

Huntsman's biography, which I have given more fully than I at first intended, shows that he was possessed of great perseverance, which is obvious from the difficulties he encountered and overcame in perfecting his valuable invention, and young men should remember the same perseverance displayed to-day in any calling will produce equal results.

Of the total quantity of cast steel manufactured in England five-sixths are produced in Sheffield, and it has made this town the greatest laboratory of the world of this valuable material. The facilities for experiment and adaptation they have in Sheffield, has enabled its steel makers to keep the lead in the manufacture, and surpass all others in the perfection to which they have carried this important branch of our National industry. Many persons say there are most important secrets in connection with the Sheffield trade, and some of the firms still affect secrecy in their operations. I doubt not but that much of the success of the Sheffield manufacturers is attributable to the practical skill of the workmen, who have profited by the accumulated experience treasured up by their class through many generations. The results of the innumerable experiments conducted before their eyes have resulted in a most valuable, though unwritten code of practice, the details of which are known only to themselves. But I think the real truth lies in the terse sentence of one of the best makers who said a little while ago :—

"The great secret is to have the courage to be honest, a spirit to purchase the best material, and the means and disposition to do justice to it in the manufacture."

I have dwelt so long upon Huntsman that I cannot do more than merely glance at a few others, but the history would be incomplete without mentioning Mushet, Bessemer, and Siemens.

David Mushet was born in 1772, and was brought up as an accountant, but being of a speculative and ingenious turn of mind, the remarkable conversions which iron underwent in the process of manufacture, very soon began to occupy his attention. By indomitable industry and perseverance he became one of the most skilled assayers of metals the world has seen, and his discovery of the black band ironstone has elevated Scotland to the highest rank among the iron making nations of Europe, with resources still in store that may be considered inexhaustible.

Mr. Mushet published the results of his laborious investigations in a series of papers, which were afterwards reprinted in a collected form in 1840, under the title "Papers on Iron and Steel." These papers are among the most valuable original contributions to the literature of the iron manufacture that have yet been given to world, they contain the germs of many inventions and discoveries in iron and steel, which have since been worked out by different experimenters (and a copy ought to be in our library.) Among the most important results of Mr. Mushet's life-long labours the following may be summarily mentioned:—

Preparation of steel from bar iron by a direct process combining iron with carbon.

The discovery of the beneficial effects of oxide of manganese on iron and steel.

The use of oxides of iron for the puddling furnace in the various modes of application.

The production of pig iron from the blast furnace suitable for puddling without the intervention of a refinery.

The application of the hot blast to anthracite coal in iron smelting.

The discovery of titanium.

The discovery of black band iron stone.

Henry Bessemer (now Sir Henry) is the author of the process bearing his name, which has created so much stir in the iron making world. His first patent was taken out in 1855, and the invention consists "in forcing currents of air into and among the particles of molten crude iron, or of remelted pig or refined iron until the metal so treated is thereby rendered malleable, and has acquired other properties common to cast steel, and still retaining the fluid state of such metal, and pouring or running the same into suitable moulds." Since 1855, year by year, Mr. Bessemer has patented various modifications of his method and of the truly wonderful hydraulic apparatus and machinery connected therewith, until we have the marvellously simple process of to-day. Anyone of you who may have watched this metallurgical process will say with me, they never saw anything more startling and impressive. To see large masses of molten iron manipulated with an ease as if but of a feather's weight, to see the volcanic-like eruption of flame and sparks when the blast is turned on, to see the metal quickly poured into the moulds prepared for its reception, is truly marvellous and interesting, and though often seen by some of us is always fresh and impressive.

Dr. C. William Siemens, F.R.S., is the inventor of the regenerative gas furnace used in the production of iron and steel, by the open hearth process, also the patentee of making steel direct from the ore in a rotatory furnace heated with gas made in his producers. Likewise of a process of making cast steel by the fusion of pig iron with varying proportions of malleable or bar iron scrap crop ends of rails, and Bessemer steel scrap; and also several modifications of the above and machinery incident thereto.

In this district the name of Sir Joseph Whitworth is connected with steel, and a certain kind bears his name, but Sir Joseph was not an inventor of steel, but of the mechanical treatment thereof.

The Manufacture of Steel.

Under this division only the most important processes will be described, several that are very interesting will be omitted, but in order to connect ancient methods with modern practice permit me to refer to one or two ancient processes.

Indian Process. This is the germ of the modern blast furnace, and a description of this method is to be found in the transactions of this Association for 1891, and need not be repeated. Iron thus made is then worked by the smith in a very crude manner, but by a careful selection of the best material, rejecting all that is steely or not sufficiently decarbonized, by repeated heating and hammering, he forges it into any desired shape for nails, hasps, arrow, and spear heads, &c.

In order to produce steel, the iron made by the Indian process is put into a cementation furnace, the following description of which is given by Dr. Percy in his work on Iron and Steel:—

Ancient Cementation Process. "The iron produced by the ordinary Hindoo process is cut into small pieces, and packed closely into a conical unbaked crucible of about the capacity of a pint, along with the iron is placed about one-tenth of its weight of dried wood chopped small of the stem of the Cassia Auriculata, and two large smooth green leaves of a species of Convolvulus or Ipomæa. The crucible thus charged is closed at the mouth with a cap of unbaked clay well luted on, and then well dried near a fire. The furnace used is a little circular pit in the ground somewhat dilated at the top. An earthen pipe, connected with two bellows, each consisting of a bullock's hide, and which are worked alternately enters the fire at the bottom. A row of crucibles is first laid round the sloping mouth of the fire place: then within these another row is placed, and the centre of the arch thus formed is occupied by a single crucible making in all 15. The crucible in the outer row opposite the nozzle of the bellows is then taken out, and in its stead, an empty crucible is placed horizontally with its mouth directed inwards. This crucible can be readily drawn out and replaced, and the opening which it closes constitutes the fire hole through which fuel is introduced. The fuel is charcoal with which the fire place is filled, and the arch of crucibles charged as stated above is covered over. The bellows are then plied during four hours when the operation is completed. A new arch of crucibles is constructed and the process goes on night and day, five sets of 14 crucibles each, being every day worked off. On breaking open the crucibles the steel is found melted into the well known conical cakes of wootz, which usually present a radiating wrink-

ling on their upper or flat surface and are surrounded by some vitrified matter, the weight of steel in each crucible is about two lbs., and in some the fusion not being complete the steel is inferior. The wootz is then worked in a charcoal fire urged by bellows and can only be forged at a low red heat, and even then not without much care. It is capable of acquiring great hardness, and from it the tools of the ancients were made. Damascus was long celebrated for its sword blades, which it has been conjectured were made from the wootz of India." This method is practiced in China, Borneo, and Madagascar.

The Direct Processes.

The next step is the *Catalan Process* described in the transactions of this Association and therefore not repeated.

To make steel with the Catalan furnace, the process was arrested before decarburization was completed, and the result was a mass of more or less steely iron, useful for common purposes, but it was very irregular in quality.

Omitting all mention of other ancient methods we come to the *Puddling Process.* A description of puddling is given in the volume aforenamed. Puddled Steel, as its name implies, is obtained by arresting the puddling process when there is still enough carbon (5 to 10 pts. in 1,000) left to constitute a low steel when the damper is shut, and the puddled balls treated as in the case of iron. The art essentially consists in a nice regulation of the temperature, which should be lower than in puddling iron, and in arresting the process at the proper stage of decarburization.

To produce this material, small charges, sometimes only two cwt. are puddled, and in bringing the iron to nature, the flame of the fire is supplied with less air than when fibrous bar iron is being manufactured, so that less of the carbon may be extracted. The presence of manganese in the iron to be puddled is decidedly favourable to the production of puddled steel, perhaps because the slags containing this metal are more thinly liquid and cover the surface of the iron more effectually, thus hindering the complete removal of the carbon.

Puddled steel is never uniform, and requires remelting before being applied to the best purposes; it was first made in 1835, at Carinthia, and has been until recently regularly fabricated,

particularly on the continent, where it is used for a low class of cutlery, wagon axles, files, springs, &c. Many fine specimens were exhibited in London in 1851; it was first practised in England about 1858, by the Mersey Steel and Iron Company, Liverpool. Naylor, Vickers, and Company, of Sheffield, used this material largely in their cast steel bells. Ebbw Vale and a few others have also made a considerable quantity.

The simplicity of the Direct Process is such, that attempts to improve it naturally preceded the elaborate processes now in use for the production of steel upon a gigantic scale; nor can it surprise us to find, that attempts have been made from time to time down to the present day, to revert to the ancient and more simple methods. The efforts of Chenot, Gurlt, Blair, Clay, and many others might be mentioned, but the most successful was the late Sir C. W. Siemens, who believing there was a promising field for the experimental metallurgist in this direction, and that his regenerative gas furnace possessed advantages over others as a means of producing heat, engaged in extensive researches at his steel works in Birmingham in 1873, the results of which he communicated to the Iron and Steel Institute. Encouraged by these results he ventured upon a larger application, and established works at Towcester in Northamptonshire (it would have been wiser to have fixed upon a locality with fuel, skilled labour, and better ores within reach). He built three rotative furnaces, these were lined with iron oxides, about 30 cwts. of ore mixed with about 9 cwts. of coal was charged into the furnace, the gas turned on, and the furnace was then made to rotate slowly for about 2½ hours, by which time the reduction of the metal should be completed, and a fluxed slag formed. The slag was then tapped, the heat of the furnace and the speed of rotation increased to facilitate the formation of balls of iron, which in due course were taken and heated in the usual manner. To make steel the balls of iron were remelted by the open hearth process, or steel was made direct from rich ores free from sulphur and phosphorus. These works were a complete failure. At Pittsburgh in America I saw a works making iron by the direct process but it had every appearance of failure. Nothing but minor attempts to solve the problem have since been made.

It is a matter of fact, that iron and steel of very high quality can be produced from ores not superior to Cleveland ironstone by the direct process, but the question remains—at what cost can this conversion be effected?

The Cementation Process.

The cementation or converting process consists in the conversion of bar iron by the long continued application of heat about 1170° C., to bars of iron embedded in charcoal. It is an old process, and but little is known of its history. Raumer describes it in 1722. In Sheffield steel has been made by this process from the earliest to the present time. The furnace consists of two oblong rectangular troughs, technically called "converting pots." They are made of "fire clay," or are built up of slabs of a peculiar kind of fire stone, obtainable in the neighbourhood of Sheffield, and possessing the property of not cracking if heated slowly to a high heat, and allowed to cool slowly, The slabs are united together with a mortar made of ground fire clay. Each "pot" is about four feet wide, four feet deep, and twelve feet long, open at the top, and are placed side by side; they are enclosed within an arched fire brick chamber, with arched openings at each end, through which a man can enter. Underneath is a fire place, the flues of which conduct the heat all round each pot, and into the arched space above. By this arrangement the pots may be uniformly heated to a high temperature. The whole is contained within a hollow cone of brick work, open at the top, just like an ordinary glass furnace. At the bottom of each pot is placed a layer of charcoal, broken up into small pieces, from a quarter to half an inch square. On this a layer of bars of iron about 8in. broad and ¾in. thick (manufactured from Dannemora ore) is placed flat side downwards, and in order to allow for expansion they must be somewhat shorter than the internal length of the pot. This layer of bars is covered with charcoal about ¼in. thick; then a second course of bars is laid, and so on in succssion, bars and charcoal in alternation until the pots are filled. A thicker layer of charcoal is placed at the top, and this is carefully plastered over with "wheelswarf," a silicious species of mud, which is produced by the wearing away of the Sheffield grindstones, and

is mixed with the finest steel dust from the steel which has been ground away; this substance will resist long exposure to great heat, and renders the top of the pot practically air tight.

The converting pots, full of alternate layers of iron and charcoal, and for all practical purposes hermetically sealed, are *gradually raised* to nearly a white heat. In order to test the progress of conversion, and to ascertain the precise moment when the fire should be allowed to go out, two or three bars of iron are allowed to protrude through a hole in one of the pots, made for the purpose. These "tap bars" are drawn and inspected at or near the close of the process, and are tightly packed in white ashes where they pass through the end of the converting pot, so that no air may find its way to the charcoal inside. The temperature should be evenly kept for a period of time which varies according to the degree of carburization required. Steel for melting purposes requires from nine to ten days, for shearing eight days, for spring temper seven days. When conversion is attained, a week is occupied in the process of cooling, which must be done slowly in order to prevent the pots from cracking, after which the cover is broken up and removed, and the bars, which went into the furnace bars of iron, are taken out bars of "blister steel," so called from the blisters which have arisen on the surface during the process of conversion. Some of the charcoal has been consumed, but a considerable portion remains, this is sifted to free it from dust, carefully washed, mixed with an equal bulk of fresh charcoal, and experience proves this mixture to effect a thorough and satisfactory conversion. The bars are taken out, broken, and duly assorted according to the temper indicated by the appearance of their fractured surfaces.

The converting furnaces vary in size, some holding as much as 30 tons, and others not more than 15 tons. The iron gains slightly in weight during conversion. The process occupies about three weeks, and a pair of pots may be used from 20 to 40 times before they have to be replaced with new ones. With regard to the cause of the blisters much diversity of opinion has been entertained, and much written about it, but the opinion of the late Dr. Percy may be taken as a correct solution, he said:—"The blisters appear to be due to internal local

irregularities, and gaseous expansion from within while the iron is in a soft state from exposure to a high temperature. There is no doubt that all forged bars contain more or less interposed basic silicate of iron irregularly diffused throughout. The effect of the contact of carbon, at a high temperature with the particles of this silicate, will most probably be the reduction of part of the protoxide of iron with the evolution of carbonic oxide, and if this be so, the formation of blisters may be satisfactorily accounted for."

Bar Steel is blister steel which has been tilted or rolled down to the size required.

Single-shear Steel is produced by welding half a dozen bars of blister steel together. Only those bars are chosen in which the process of conversion has been so far carried on, that the outside of the bar is steel and the centre of the bar iron. When these are are welded together, and tilted or rolled down to a much smaller dimension, the result produced is a mechanical mixture of iron and steel, a material which combines great tenacity with the capability of carrying a moderately hard cutting edge, and is much employed for certain kinds of knives, hammer faces, &c.

Double-shear Steel is produced by drawing down single shear to suitable sized bars, and rewelding two of them together, so that the mixture of iron and steel may be more perfect. In welding, the steel is dusted over with finely powdered clay, to prevent superficial oxidation, and subsequent decarburization as far as practicable.

The word *shear* was applied from the fact that the blades of shears formerly used for cropping woollen cloths, were always made from this kind of steel.

Crucible Process.

Blister steel however much hammered is never perfectly homogeneous, hence the necessity of absolute fusion, and the melting of the higher qualities of steel is a process requiring the greatest skill; and one of the principal reasons why the trade has become to such a remarkable extent localized in Sheffield, is the importance to this branch of the trade to select from a large class of experienced workmen, a few exceptional men in

whom sound judgment, technical skill. and steady habits are combined. Cast steel is blister steel melted in a "crucible," and poured into a "mould," thus becoming an "ingot," which is afterwards hammered or rolled to the size required.

The furnaces used are simple rectangular chambers, each having its own flue in the stack common to a row of furnaces. The tops of the furnaces are on a level with the floor of the casting shops, and at the bottom they are easily accessible from the cellar. The furnaces are each provided with a moveable cover, consisting of a large fire brick let into a strong wrought iron frame with a suitable handle. Coke is employed as fuel. The furnace is built of good fire bricks. Upon the fire bars a little stand is placed made of the same materials as the crucible or pot, and upon this it is placed. The pots vary in size, and are generally made in a room adjoining the melting furnace. They are made of a mixture of Burton and Stannington clay (sometimes of China clay from Devonshire) a small quantity of old ground pots, and ground cinders are also added. Great care is taken that the clay is absolutely disintegrated and perfectly mixed together. This is accomplished by treading it in a trough, the pot maker and his assistant kneading it with their bare feet. The pots are moulded in an iron flask by means of a wooden plug, and slowly dried at the back of the stack, and the night before they are used gradually heated to a dull red heat, a process called annealing. Crucible making is a very important part of the manufacture of best cast steel.

Good steel cannot be made if the pots are defective. Each pot lasts one day and is used three times, containing severally about 50, 44, and 38lbs of steel each round. The object of lessening the weight of each successive charge is to bring the surface of the molten metal to a different place in the pot, because the scum which accumulates on the surface injures the pot, which is decomposed for some depth at that point, by which it is reduced in thickness. The furnaces are large enough to contain two pots, one in front of the other, and deep enough to allow of sufficient coke to cover the lids. The lids are made of the same materials as the pots. They are circular, a little larger in diameter than the mouth of the pots, flat on the under side and somewhat convex on the upper side. The operation of melting

requires care and skill, two pots previously annealed are placed in each furnace, and "brought up" to a high temperature, and in about 20 minutes a "charge" is put in. The charge consists of bar steel, carefully selected, of the exact temper required; all "flushed and aired" bars are rejected, and after it has been broken up into small pieces and carefully weighed it is put into the pot through a funnel shaped charger of sheet iron, the lid is carefully adjusted and the furnace filled with coke. After three-quarters of an hour it is again replenished with fuel, and the degree of heat to which the furnace is allowed to go is carefully regulated by the man who "works" the holes, he having perfect control over them by means of the two flues, into either of which he can insert a fire brick if required. A brick in the furnace flue checks the heat by lessening the draught, and one in the cellar flue increases the heat by increasing the draught. The melter in another three-quarters of an hour takes off the lid of the pot to examine the melting, and periodically inspects the pot and according to his judgment, more or less coke is added to complete the process. When manganese is used it is added along with the steel. The head melter gives the final instructions to the "puller out," and decides the precise moment when the steel is "dead melted" and the holes sufficiently burned down to allow of its being "teemed," or poured into the mould with a fair chance of producing a sound ingot. The puller out envelopes his legs and arms in sacking and freely besprinkles them with water, and he stands over the furnace mouth whilst the cellar lad loosens the pot from the clinker adhering to the bottom of the furnace. He raises the pot with a pair of "pulling-out tongs" and lifts it from the hole to the floor of the furnace. The lid is instantly taken off with a pair of "lid tongs," and the scum or flux is removed by a skimmer from the surface of the molten steel, which is then poured into a cast iron mould formed in two halves tightly ringed and wedged together. The interior of the mould has been previously covered with a coat of coal tar soot, to prevent the ingot from adhering to it. The moulds have previously been placed in a rectangular cast iron box, called a "teeming hole," let into the floor of the casting shop, and having a quantity of coke dust on the bottom. The chances of accident in the melting of

steel are many and various, but it is not necessary to detail them here.

When the ingot has become cold it must be "topped," that is the hollow or "piped" part must be broken off, until the ingot shows a sound fracture, and before it has had time to rust the ingots must be carefully examined, those not properly melted being rejected. An experienced eye can judge of the percentage of carbon to a wonderful nicety, by the appearance of the fracture, and this must be marked on the ingot. Between one per cent. of carbon and 1¼ per cent. every tenth per cent. must be marked, and an experienced hand will detect so slight a difference as between 1·25 and 1·30, &c.

The ingot of cast steel is then reheated, and great care must be taken not to burn or overheat it. It should be continually turned round in the fire, and a mixture of sand and borax sprinkled upon it. It is of importance that the ingot should be heated through, and at the same time they should not be too long in the fire. When hot enough they are hammered or rolled to the size ordered. The forging, tilting, and rolling of cast steel requires experienced workmen and expensive machinery. The application of gas for the melting of steel has been used successfully, but coke is principally used, the melters from long practice preferring it; but in time gas melting is sure to be generally adopted.

The number of tempers of steel is infinite, but a celebrated Sheffield maker has given these as the most useful: "*Razor temper* 1¼ per cent. carbon, when properly heated and forged will do twice the work of ordinary tool steel for turning chilled rolls, &c." "*Saw File temper*, 1⅜ per cent carbon." "*Tool temper* 1¼ per cent. carbon, most useful for turning tools, drills. planing tools, &c. This can be welded if required, but requires the greatest care and skill." "*Spindle temper*, 1⅛ per cent. carbon, useful for circular cutters, very large turning tools, taps, dies, and requires great care in welding." "*Chisel temper*, 1 per cent. carbon, will harden at a low heat, and is tough to resist blow of a hammer without snipping, used for cold chisels, hot sets, &c." "*Sett temper*, ⅞ per cent. carbon, used for cold sets." "*Die temper*, ¾ per cent, carbon, used where surface only is hardened, such as in stamping, &c."

So called best crucible cast steel is sold at low prices by some manufacturers, and bought by credulous consumers; but though it is possible that occasionally some high priced steel is bad, it is not possible for low priced steel to be good. The finest steel cannot be made of cheap material, and the process of manufacture is slow and costly.

The Bessemer Acid Process.

This process is the most important advance made in the metallurgy of iron since the introduction of the puddling furnace and the hot blast. It was first made known by Mr. (now Sir Henry) Bessemer at a meeting of the British Association held at Cheltenham in 1856, but as is usually the case with inventions, some time elapsed before successful working on a commercial scale was assured, the principal difficulty being not using pig iron of the purest kinds. Some of the earliest successes were obtained in Sweden. Subsequently only the best iron free from phosphorus obtained from Cumberland and Lancashire was used. This process essentially consists of blowing large quantities of atmospheric air, divided into numerous small jets, through a bath of molten cast-iron, thus effecting the rapid oxidation and consequent combustion of carbon, silicon, and other substances present in the pig iron. The very high temperature which is thus developed in the converting vessel, is sufficient to keep liquid the resulting decarburized iron, instead of leaving it in the viscid pasty condition in which it is produced in the puddling furnace, and consequently it can be poured into moulds. Experience has everywhere shown that in order to obtain steel of good quality by the Bessemer Acid Process it is necessary to use pig iron of exceptional purity. It should be almost absolutely free from phosphorus, sulphur, and copper, as this process is incapable of reducing to any great extent the proportion of those bodies from the pig iron. But the presence within certain limits of silicon and manganese is desirable.

The blast is injected at a pressure of 18 to 23 lbs. per square inch, and the very high temperature attained is obviously the result of the intimate contact of the air and the various oxidizable bodies present. This oxidization takes place

simultaneously throughout the whole of the mass (and not as in puddling only at the surface, or where the metal comes in contact with cinder or some other oxidizing agent). The increase of temperature goes on increasingly, from the moment the blast is first turned on until it is shut off. The silicon is first transformed into silica, which uniting with oxides of iron and manganese, forms a liquid cinder. If the blowing is continued after the oxidation of the whole of the carbon, the heat will be kept up by the combustion of the iron itself, which emits a dense brown smoke, and the product is burnt iron. The blowing must therefore be stopped before this point is reached, or the metal will require the addition of carburizing materials.

The converter is an ellipsoidal vessel, having an external shell or casing, made of wrought iron plates rivetted together; it is flat-bottomed, and is terminated above by an oblique conical mouth. It is supported by a strong wrought iron belt furnished with trunions working in cast-iron standards. One of the trunions is solid, and carries a pinion gearing into a rack which is worked by hydraulic pressure; the other is hollow and is in communication with the blast. The lining of the converter requires to be made of the most refractory material which can be obtained, sometimes fire bricks are used, but generally "ganister;" this is finely ground and mixed with finely powdered fire bricks and is stamped whilst in a moist state round a wooden core, which is afterwards removed; it is then slowly dried and any cracks made good. Into the bottom of the vessel is fitted a series of slightly tapered conical fire bricks or tuyeres, each about 20 inches deep, 5 to 8 inches dia., and perforated with 7 to 12 parallel holes about ⅜ of an inch dia.; from five to 17 of these tuyeres are arranged in the bottom according to the size of the converter, at equal distances from each other. The lower ends pass through a guard plate forming the top of the air chamber or tuyere box, which is a cylindrical chamber communicating with the hollow trunion by means of a curved pipe.

A Bessemer Plant consists of cupolas with necessary staging, troughs, &c., chimneys with hoods to carry away the hot air, sparks, smoke, &c., two converters, which are placed on opposite

sides of the casting pit; in the centre of the pit is a vertical hydraulic cylinder, with a ram carrying a cross arm, to one end of which is attached the ladle balanced by a counterpoise at the other end. The ladle is made of wrought iron, and like the converter lined with ganister, it is provided with a tapping hole at the bottom which is closed by a "stopper" coated with ganister, which can be raised or lowered at pleasure; the counterpoise is provided with gearing by which it can be gradually moved towards the centre as the ladle is emptied. The ingot moulds are arranged around the periphery of the casting pit so that the tapping hole of the ladle can be brought successively over each. Hydraulic cranes are arranged in convenient positions for quickly removing the ingots and moulds. All the valves, gearing, &c., connected with the cranes, the centre ram carrying the ladle, and the converters, are controlled by means of levers from an elevated platform placed so as to command a distinct view of the whole. Power is supplied by large blowing engines, and hydraulic pumps with accumulators. Converters are usually of 10 tons capacity, and often 15 and 20 tons.

The method of conducting the process is generally as follows: The converter is heated to redness (if not hot from a previous charge) by coke, then turned with the mouth down to remove the unconsumed fuel, and brought up again with the mouth in the right position towards the cupolas; the trough lined with ganister from the cupolas to the converter is then put in position and the blast turned very gently on; the cupolas are then tapped and the molten iron is run along the trough into the converter, which is then swung slowly back to a vertical position with the mouth under the hood of the chimney, and the blast is turned on at a pressure of 18 to 23 lbs. per square inch. The flame which issues at first from the neck of the converters is of a yellowish red colour, is but slightly luminous, and is not accompanied by a large amount of sparks, and this lasts from four to six minutes. This is followed by a period of active ebullition, the flame increases in brilliancy, and showers of sparks are abundantly thrown out with occasionally lumps of burning iron. This boiling period lasts six or eight minutes, at the expiration of which time the intensity of the action begins to diminish, fewer sparks are sent out, the flame acquires a bluish violet tint,

and this marks the last stage; as soon as the whole of the carbon has been consumed the flame ceases, but is immediately succeeded by a stream of white hot gas; if after this stage has been reached, the blowing is continued it is at the cost of burning the iron which emits a brown smoke. As soon as the appearance of the flame indicates the almost total removal of the carbon, the blast is turned off and the converter turned down to receive a specific quantity of molten spiegeleisen which is run along a trough from a special cupola, in the same way the charge was originally introduced. There is sufficient ebullition still going on to mix the spiegeleisen with the charge (it was formerly customary to turn on the blast again for a minute or two, but this is now discontinued). The ladle is brought into position under the mouth of the converter which is at once emptied. When the ladle is charged it is raised sufficiently to clear the top of the ingot moulds which are filled in succession. Care should be taken not to let the molten steel impinge against the sides of the moulds, or unsound ingots will be the result. To avoid this they are sometimes placed in groups and fed from the bottom by a "runner." The moulds when full are covered with sand and stoppered by means of a plate and cottar in the usual way. A "blow" occupies from 12 to 20 minutes, according to the quality of the pig iron. The Bessemer Acid Process just described is substantially the same as that originally developed by the inventor. Some firms instead of adding spiegeleisen arrest the process before the carburization is completed, and by constant practice, can tell to a nicety what is required for their purpose. The molten metal is in some cases brought in ladles direct from the blast furnace and poured into the converter; this avoids the extra cost of remelting the pig iron in a cupola, and saves considerable expenditure of capital and labour, but the quality is not regular, and it cannot be depended upon. In America, at the Homestead Works, the molten metal from various blast furnaces is taken into a mixing tank lined with ganister which will hold one to two hundred tons, this being tapped into ladles and taken to the converters, and they say by this means they get a more uniform quality.

It is difficult to give a correct statement as to the output in England. Most of the firms have old plant with the old

fashioned deep pit, the centre ram and ladle with a fixed radius, and thus cannot deal with a large output. Others only make as much as they require for their own use, such as the works at Crewe, whose largest output with two converters is about 1,000 tons of ingots per week. One firm tells me, that with two converters, capacity 10 tons each, they have 17 blows in a "turn" of 12 hours, making 180 tons of ingots, or 1,980 tons of ingots per week of six days of 11 turns, or 7,920 per month. The best output from the same firm when using four converters was 2,980 tons of ingots per week. Another firm with modern plant, two converters, capacity six tons each, only work one converter at once and get a blow every hour, thus making 140 tons of ingots in 24 hours, they then use the other converter whilst the first one is having a new bottom put in. Taking the average of English practice we may say that with two converters, capaity 10 tons each, they have 30 blows in the 24 hours, say 300 tons of ingots. The bottom of the converter requiries frequent renewal, and a new lining every three months.

The striking features of American practice are its large outputs, and this implies short blows and short intervals between the blows. They have their iron low in silicon and this helps short intervals and fast blowing; they get enough heat even with little silicon, because the blows and the intervals between them are so short that relatively little heat escapes from the converter. This necessitates powerful machinery, efficient organization, extreme specialisation, and sub-division of labour, which can be profitable only when the output is large. They have three 10 ton converters working in one casting pit, three ladle cranes, four ingot cranes, two blowing engines working at 25lbs. pressure, two pressure pumps, eight spiegel cupolas, four iron cupolas; if a converter wants a new bottom or repairing, it is instantly taken away and another put in its place, these being always ready on hand.

In 1889 a pit of this discription turned out 1,639 tons of ingots in 24 hours, 8,549 tons in the week, and 36,232 tons in the month. You may perhaps say this is a spurt. Returns from another works are given July 1, 1889, to June 30, 1890, a period of 52 weeks and one day, if 11 shifts a week are worked,

give a total of 574 shifts available. The works made 542 shifts, leaving 36 idle shifts to cover holidays, strikes, stoppages for repairs, and lack of orders. They have two 10 ton vessels. The total annual output was 318,635 tons, which implies an average output of 26,553 tons per month, or of 1,176 tons or about 118 blows per 24 hours, or of one blow every 12·2 minutes the whole year through! What think you of this? Is our English practice fossilized? The subject is worth discussing, but I must refrain.

The Open Hearth Acid Process.

The open hearth furnace is now so well known that few words will suffice to describe it. It is a large retangular furnace having a frame-work of cast iron plates well braced together. It is built of fire bricks, the melting chamber being very similar to a puddling furnace but much larger, and the bottom is made of refractory sand. It is not heated by a fire grate, nor has each furnace a chimney for the escape of the gases and smoke like the puddling furnace. The regenerative form invented by Dr. C. W. Siemens is generally adopted. There are several modifications of this form of furnace, some possessing special features, such as the Batho, Pernot, &c., but it would take too long to describe them. The heat is produced by a mixture of producer gas and air. The producer gases and air used are separately heated by the waste heat of the flame by means of the regenerators placed beneath the furnace. "The regenerators consist of four chambers fitted with fire bricks loosely stacked together, so as to expose the largest possible surface to the gases passing between them. The waste gases from the furnace above are drawn through two of these regenerators, heating the upper rows of the bricks to a temperature little inferior to that of the furnace itself, and passing successively over cooler surfaces, finally escapes to the main flue of the chimney. The direction of the draught is then reversed, and the flame and heated waste gases are employed to heat up the second pair of regenerators; at the same time the producer gas and air entering the furnace are passed in an opposite direction through the first pair, and coming at first in contact with the cooler brickwork below, are gradually heated

in their ascent until, on arriving near the top, they attain a temperature nearly equal to that possessed by the products of combustion. These heated gases and air finally pass up into the furnace, where they meet and ignite, producing a strong flame, which after passing through the furnace is drawn down through the regenerators to the flue." Thus the current of waste gases, and combustible gases and air for heating the furnace is constantly reversed through the pair of regenerators.

Heating by radiation has been adopted by some firms, and it said with good results. Mr. F. Siemens has a new furnace which does away with separate gas producers. It is a producer, regenerator, and furnace combined. Gas producers such as those of Siemens, Dowson, Wilson, and others are well known.

In carrying on the process the furnace is first heated by the gases passing through the regenerators, or it is sufficiently hot from a previous charge. As to the method of charging, whether pig iron or scrap is put in first, depends upon the state of the bottom of the furnace, and upon the kind of scrap there is in stock; usually pig iron is put in first in considerable quantity covering the bottom of the furnace, then the scrap, and pig iron again on the top of this, thus the scrap is in the middle. The weight or charge required is put in at once (and not as some text books say by additions every 20 or 30 minutes.) When the whole is melted a sample is taken, and pig iron, scrap, oxide, ore, or spiegeleisen added as may be required; samples are withdrawn at frequent intervals, cast into a small ingot, flattened under the steam hammer, plunged into water whilst red hot, and broken cold. From these tests, an experienced man can tell when the required quality is obtained. The metal is then run from the tapping hole down the channel into the ingot moulds prepared to receive it. The capacity of open hearth furnaces varies from 12 to 40 tons, but furnaces of a capacity of 25 tons are generally adopted. It is found that metal made in the 40 ton furnaces is not so uniform in quality. The charge usually consists of about 18 tons of pig iron and 7 tons scrap, but this will vary a little according to the price of scrap. Each charge makes about 3¼ tons of slag, which is useless except as ballast for roads. A charge may occasionally be worked off in 10 hours, but the average is one every 12 hours. A good

working furnace will turn out 10 to 11 charges per week or 270 tons of ingots. Open hearth furnaces are not worked continuously like blast furnaces, the usual practice is to commence work at 9 p.m. Sunday, and finish at 1 p.m. Saturday. A moderate sized plant would consist of five furnaces.

Open Hearth and Bessemer Basic Process.

After the discovery of the Bessemer and Open Hearth processes of making steel, rapid progress was made in the manufacture and all relating thereto, and experience confirmed the first impression that none but the purest pig iron was suitable, and the presence of phosphorus especially was an insuperable difficulty. Consequently, as nearly five-sixths of the metal obtained from British ores contained so much of this impurity as to render it unfit for the manufacture of steel, and not only the great bulk British ores, but French, German, and Belgium ores were in like manner unavailable. The question of the removal of phosphorus was of the highest importance. All metallurgists, chemists, and others, felt that whoever could solve the problem would produce a revolution equal to the Bessemer process, secure a large fortune, and be a great benefactor to the human race. All minds were thus straining after this prize.

Mr. J. Lowthian Bell, F.R.S. (afterwards Sir J. L. Bell), one of the most skilled metallurgists of this age, a man of high scientific attainments, of great research, with patience and accuracy in detail, with exceptional opportunities and advantages at command, undertook the solution of the problem, and in March, 1877, read a paper before the Iron and Steel Institute, entitled "On the Separation of carbon, silicon, sulphur, and phosphorus, in the refining and puddling furnace, and in the Bessemer converter," which caused considerable excitement and discussion. In September, 1887 Mr. Bell read another paper on the same subject, which produced a long and interesting discussion; both these papers stated that the intense temperature, which accompanies the Bessemer process, prevented the elimination of phosphorus. In March, 1878, Mr. Bell read a paper "On the separation of phosphorus from pig iron." As this was most important and led to immediate results, permit me to give you my impressions in

my own language of what took place, for I was present, as a "looker on." Perhaps if any of those who were also present as principals, should ever hear of, or read this paper, they may doubt the accuracy of my way of putting it, for events never present themselves to various persons in the same way, and it differs from the printed report of the proceedings. To me it was a memorable occasion and has made a lasting impression. The paper was an excellent one, and proved that the intensity of temperature alone materially modified the conduct of phosphorus, and that the solution of the difficulty was to carry on the operation at as *low a temperature as possible*, hence away with all hopes of doing this by the Bessemer and Siemens processes. When Mr. Bell sat down the thought was ringing in my head "as low a temperature as possible," and there was a gleam of hope that all existing works might perhaps be thus used. You can easily imagine in an assembly of this kind, where the Council consists of eminent men, where those who take part in the discussion are for the most part men of skill and experience, eminent chemists as well as practical metallurgists, how difficult it is for a young man to get up and give an opinion, especially if it is adverse to the prevailing one. But after a few members had spoken, a young man, Mr. Sidney Thomas, arose looking as "pale as death," trembling with excitement; but in a few modest words, said he differed entirely from Mr. Bell's conclusions, and that instead of a *low temperature it should be at a high temperature*, and he had succeeded in effecting the almost complete removal of phosphorus in the Bessemer process; experiments had been made by himself and his fellow student, Mr. Gilchrist, and he believed all practical difficulties in the way had been overcome, and that Cleveland pig iron might be made into good steel without any intermediate process, and at a high temperature. I sat at one side, where I could see everyone, and you may imagine the look of surprise on all faces. I saw the members of the Council look at each other and smile, as much as to say, ah, yes! We have seen young enthusiasts before, who thought they had made great discoveries! It seemed impossible that an unknown "outsider" should have discovered the valuable secret, and should have the courage to tell Mr. Bell, the Council, and Members of the Iron and Steel Institute,

that they were all wrong; and to tell them this too at a meeting called to consider this subject, and to hear from one of its most skilled members an account of his researches, and the lines upon which further investigations were to proceed, especially when this opinion was endorsed by Dr. Wedding, Professor Kerl, and M. Euverte. Discussion lagged and soon ceased. A message was sent to Mr. Thomas, I suppose, asking him to stop; if so, I resolved to stop too and see the end of this wonderful revelation. Immediately the discussion closed and most of the members had gone out, a little ring was formed of the members of the Council and others, with Mr. Bell and Mr. Thomas in the centre. I could not hear distinctly all that was said, but understood Mr. Thomas to repeat his declaration, that steel could be made from poor pig iron and at a high temperature as in the Bessemer process, and of this he had no doubt whatever, but he lacked means and opportunity to carry on his experiments on a large scale. I believe these were there and then liberally offered and gladly accepted. No useful purpose will be served by detailing the various steps by which the Thomas-Gilchrist process was firmly established, or in giving the names of those who helped to get over the initial difficulties, which were chiefly mechanical, or in telling of those who claimed to have thought exactly of the same thing.

By this process good steel can be made from the poorest ores, and the invention consists in having a *basic lining, and in forming a highly basic earthy slag, so as to afford a strong base with which the phosphoric acid may unite at the moment of its formation.* Hitherto a silicious lining had been used in the furnaces and converters, and consequently the necessarily silicious character of the slag prevented the removal of the phosphorus.

The first experiments were made with a lining of silicate of soda, and they soon found that the presence of a considerable amount of lime in a not too silicious slag was favourable, and in a large scale essential to the removal of phosphorus, this being necessary to avoid the waste of the lining and of the metal. In the Bessemer process what is wanted is to secure a highly basic calcerous slag at an early stage of the blow. The lining aforenamed was not considered satisfactory, and the next

step was to make a basic brick of an alumino silicious limestone fired at an intense heat. Afterwards, certain aluminous magnesian limestones and equivalent combinations were used and produced better effect.

I am not able, nor is it necessary, to enter fully into the precise conditions for obtaining a satisfactory basic lining. The question has long since been satisfactorily settled, and the removal of phosphorus in Open Hearth Furnaces and Bessemer Converters is simply and entirely the question of "cheaply producing a highly basic slag, containing under 20 per cent. of of silicia and over 30 per cent. of lime and magnesia." Some may wish, however, to know what is the essential difference between the *acid* and *basic* processes? In the *acid* process the bottoms of the furnaces and the linings of the converters are made of *sand*. Sand is chemically known as an *acid* and the slag produced *will not absorb phosphorus*.

In the *basic* process the bottoms of the furnaces and the linings of the converters are made of magnesium limestone calcined, or as it is best known as Dolomite. This is a *base* or neutral compound, and limestone thrown into a basic furnace or converter does not attack the dolomite on the bottom or sides, but enables a *basic slag* to be formed which *absorbs phosphorus*, whereas, if limestone was thrown into an acid furnace, it would flux the bottom away into slag. This invention has been of the utmost importance to the continent of Europe, enabling them to use their poor ores in the manufacture of steel, and thus become most formidable competitors of England.

Mr. Cooper, of Middlesborough, is the most successful and experienced maker of steel by the Bessemer Basic process in this country. In reply to my enquiry as to his present practice and results, he most kindly sent me a drawing of the converter he is using, and said "The Bessemer Basic process is frequently conducted in converters of the same shape as are used for the ordinary Bessemer or Acid process; but in my early experience I came to the conclusion that a slight modification was desirable in the converters to be used by us at these works (North Eastern Steel Co., Ltd.) We accordingly constructed some of slightly different shape, the chief difference being at the top, in the nose or mouth. In the ordinary converter used by the Acid process,

the front side is usually quite vertical, terminating at the mouth. In practice, with converters of this shape, we found that the slag (when blown up towards the mouth by the action of the blast) washed down the front side and cut away the lining. To obviate this, we constructed our converters with an overhanging front side at the nose, so that the slag when lifted up to the mouth, instead of washing down the front side and cutting away the lining would fall vertically back again into the bath. There is also another advantage derived from this modified shape of converter for the Basic process, and that is, that it can hold the charge in the horizontal position on either side. Another point is that it is necessary to have the Basic converter somewhat larger than the Acid converter for dealing with a similar charge, because of the large amount of slag which is made in the process. Our converters are made in three pieces, the body or centre portion, the bottom, and the nose. These separate pieces are lined with calcined dolomite, that is, calcined magnesian limestone, mixed with tar and pressed into bricks by hydraulic pressure, for the body. The bottom section and the nose are rammed up with a similar material. We use here 13¼ tons of molten metal, and this carries 2¼ tons of lime, so that the total charge of metal and lime come up to 15¾ to 16 tons. The molten metal is first rendered thoroughly uniform, and to a large extent is desulphurised by passing it through a *metal mixer*, which consists of a large vessel, very similar in shape to a converter, and which holds about 150 tons of molten metal. The mixer is supplied by ladles from the cupolas and the blast furnaces. Similar ladles also take each charge from the mixer to the converters. During the process of blowing, the lime, which becomes intimately mixed with the molten iron, seizes upon the phosphorus as it is oxidised, and forms a slag very rich in phosphate of lime, which now has considerable value as manure. The blowing of phosphoric iron in a Basic converter proceeds in exactly the same way as the blowing of a Hæmatite charge in an acid converter up to the point at which the carbon disappears, and from this point forward there is a distinct difference in the two processes. In the Acid process the operation is stopped, and the Spiegel or Ferro Manganese is added to produce the desired quality of steel; but in the Basic

process the blowing operation is continued for a further four or five minutes, according to the amount of phosphorus in the iron. This extra blowing after the disappearance of the carbon is called the after blow. When it is judged that the afterblow *(having regard to the phosphorus in the pig iron under treatment)* has been carried far enough, the converter is turned down and samples of the steel are taken, cast into an ingot and beaten out under a hammer, plunged into water whilst red hot, and broken cold. From the appearance of the fracture it can easily be seen whether the whole of the phosphorus has been removed or not. In case it has not been removed, the blast is turned on again, and the blow continued for a few seconds longer, and if necessary a second sample is taken. As soon as it is apparent from the sample that the whole of the phosphorus has been removed, Ferro Manganese is added in such quantities as to produce soft steel; in this the phosphorus should not exceed ·06 per cent., and it should be absolutely free from silicon. The absence of silicon is one of the distinctive features of Basic steel; this deleterious element is usually present in ordinary Bessemer or Acid steel, from ·05 to ·1 per cent., and causes brittleness."

"In case harder steel is required, carbon is added by the Darby process in the form of Anthracite coal finely ground, by which method the contents of carbon required can be obtained with the greatest exactitude. As regards output we have frequently made in our plant 640 tons of ingots in 24 hours. Our best week's work has been 3,800 tons. Our annual make is 150,000 tons."

"This output is from four converters, but owing to the comparatively short life of the lining, only three are in use at the same time, indeed, sometimes only two are available. When these works were constructed the object in erecting four converters in position was that we might always, under all circumstances, have two converters in thorough working order. To call this plant, therefore, a four vessel plant would give a wrong impression. It is really a two vessel plant with two duplicate vessels in position."

The Open Hearth Basic process is carried on in the same kind of furnaces as are used for the acid process, except that the

bottom, and sides to a certain height, must have a *basic lining* which is made of calcined Dolomite. The average capacity of a furnace is 15 tons, using 12 tons of pig iron and three tons of scrap, (the latter varying according to the selling price of scrap) and three tons of limestone is used per ton of metal made; during the working of the charge a considerable quantity of oxide is added to supply the oxygen required (which in the Bessemer process comes from the air blown in). The method of working, the number of charges per week, and consequently the output, is the same as the Acid process for furnaces of equal capacity. But in the Basic process there is a much larger quantity of slag, namely, six tons for each 15 ton charge, but this is valuable for agricultural purposes. It is ground into a fine powder and is used for manure, selling to day at thirty shillings per ton, and about one ton is used per acre.

In Germany the capacity of the Basic furnaces ranges from 12 to 20 tons.

The Saniter Process.

Sulphur as all know is an ememy of steel, and the question of desulphurisation of pig iron is a very important one for the Basic process. The difficulty is to make iron low in silicon and also low in sulphur. Recently (1892 and 1893) papers have been written on "The Elimination of Sulphur," by Mr. J. E. Stead, Mr. E. J. Ball, Mr. A. Wingham, Mr. Saniter, and others. A few words about the Saniter Process will be interesting, as he is a Lancashire man, and the process is carried on by the Wigan Coal and Iron Company, Limited. This company have a plant for dealing with the whole make of a blast furnace. The plant and general arrangements are as follows:—"The sand bed has been lowered to the ground level; on this level, and in front of the blast furnace, is a ladle on a carriage: the ladle is provided with tipping gear. The ladle is heated before the first operation, a mixture of *calcium chloride and lime* is put on the bottom, a small cast iron plate being used to prevent the metal cutting under the mixture. The metal is then run in, and as soon as the reaction ceases, is tipped into the lowered sand bed, and the slag raked out of the ladle, which is then ready for the next operation. This ladle

treats from 9 to 12 tons at a cast. The sulphur is reduced from 0·248 to 0·025." This process is most useful in connection with the Basic steel process.

Soaking Pits.

The object of the soaking pit is to make it possible to roll a steel ingot into say, a bloom, a rail bar, or other finished article, with its own initial heat without the aid of the generally adopted heating furnace. It will be easily understood that in the fluid steel poured into the mould there is a larger store of heat than is required for the purpose of rolling or hammering. This is given out when solidification takes place. Before the invention of soaking pits by Mr. Gjers the ingots were allowed to cool, and then reheated in a furnace to the temperature required for rolling. The difficulty of doing otherwise arose from the fact that a steel ingot when newly stripped is far too hot in the interior for the purpose of rolling, and if it be kept long enough for the interior to become in a fit state, then the exterior gets far too cold to enable it to be rolled successfully. Mr. Gjers' invention is a number of upright pits (a number sufficient to deal with the output) which are built in a mass of brickwork sunk in the ground below the level of the floor, such pits in cross section being made slightly larger than the ingot, and somewhat deeper than the longest ingot likely to be used. In practice the cross section of the pit is made about three inches larger than the large end of the ingot, and the top of the ingot may be anything from six to eighteen inches below the top of the pit. Each pit is covered with a separate lid at the floor level, and after having been dried and brought to a red heat, they are ready for operation. The pits are commanded by an ingot-crane so placed as to readily pass the ingots to them from the casting pit; and another crane passes them from the soaking pits to the live rollers, which conveys them to the rolls.

The ingots should be stripped as early as practicable, they are then transferred one by one, and placed separately into the heated pits, and forthwith covered over with the lid, which practically excludes the air. In these pits, thus covered, the ingots are allowed to stand and soak; that is, the excessive molten heat of the interior, and any additional heat rendered

sensible during complete solidification, but which was latent at the time of placing the ingots into the pit, becomes uniformly distributed, or nearly so, throughout the metallic mass. Comparatively little heat is able to escape. As the ingot is surrounded by brick walls as hot as itself, it follows that the surface heat of the ingot is greatly increased, and after the space of from twenty to thirty minutes, according to circumstances, the ingot is lifted out of the pit apparently much hotter than it went in, and is placed by the crane on the live rollers in a perfect state of heat for rolling, and it is always certain to be as hot in the centre as it is on the surface. During the soaking operation, a quantity of gas exudes from the ingot and fills the pit, thus excluding atmospheric air from entering; this is seen escaping round the lid, and when the lid is removed combustion takes place.

Some firms have so arranged the pits that additional heat can be obtained from the gas producers if required, so that if it happens that an ingot is delayed from any cause and is thus somewhat short of heat, it can be given.

The operation of steel-making on a large scale by this process is much simplified. It dispenses with a number of men, some of them highly paid, directly and indirectly connected with the heating department; it does away with costly heating furnaces and their costly maintenance; it saves all the coal used in heating; and it increases the yield as oxidation does not take place.

Thus steel in a finished state, such as steel rails can be made without the expenditure of any fuel, except that which already existed in the fluid metal, imparted to it in the blast furnace. The metal is taken direct from the blast furnace to the Bessemer converter, or open hearth furnace, it is cast into an ingot, and afterwards, as just described, put into the soaking pit, and then rolled.

Ingots.

Ingots vary in shape and weight, they are cast square, round, octagon, rectangular, and from a few hundred weights each to to 40 and 60 tons each. In the best practice they are taken from the mould to the soaking pits, from the soaking pits to the cogging mill, and from there to the rolling mill to be made into rails. These are put on the bar bank, sawn to length, punched, and stretched, and all this is done from the initial heat given in

the blast furnace. Where this cannot be effected, the ingots are re-heated in a reverbatory furnace, and then taken to the cogging and rolling mills to be rolled into plates or bars of any section.

Ingots for forgings, are re-heated and forged to shape by the steam hammer or hydraulic forging press. To make a good steel forging, in addition to having an ingot made of the best materials, care should be taken that the ingots are large enough to have plenty of work on them; it is a mistake to have ingots cast very little larger than the largest diameter of the forging to be made, because the centre of the ingot does not get sufficient work put upon it, and the steel in the centre and that near the outside are in a different condition. In making a forging, one third of the top end of the ingot should be cut off to get rid of the pipe, and this is in addition to the usual allowance for forging. This will account for the difference in price by different makers for the same forging, as some adopt this course, and others do not. To make steel crank shafts for ships, the same method is adopted as explained in the Transactions of the Association, 1891, except that a rectangular ingot is cast large enough for the crank; there is no laying up and welding, and different tackle is required to hold the ingot whilst being forged.

Conclusions.

Direct Process. This may be said to be "played out," the quality is so irregular, and the output so small, that there seems no prospect of its ever competing with present methods.

Converting Process. It is impossible to get good results unless the maker uses the best materials, and the accumulated experience of a century has convinced the Sheffield makers that finest quality can only be made from iron manufactured from Dannemora ores. Makers of steel by the Basic Open Hearth process say they can supply equally as good material; I must leave the Sheffield makers to decide this question.

Crucible Process. As explained, this process is slow and costly, and the iron used is very expensive, consequently the best qualities of crucible cast steel can only be sold at a high price. The finest quality cannot be made of cheap material or by a cheap process. Many attempts have been made, but so far all have failed.

Bessemer Process. By this process the greatest output is obtained, and by a well-designed plant, using the best materials, with carefulness in manufacture, no better steel can be produced for most purposes than that made by the Bessemer Acid Process. I am frequently asked which is best, Bessemer or Siemens Steel? They are equally good if honestly made, but my experience is, that for purposes where the forging is required to turn up perfectly clean, with a minimum of waste, steel made by the Bessemer process cannot be excelled.

Open Hearth Steel. As explained, by this process a large quantity of scrap can be used, the length of time required for the operation enables a number of tests to be made, so that a uniform quality can be guaranteed. Mild steel is mostly made by this process, such as is used for boiler plates, &c.

Basic Steel. Steel made by this process, whether Bessemer or Open Hearth, is now accepted by the Admiralty and at Lloyds, and it is very successful, especially in the mildest qualities.

Steel Castings. These are being very generally used, but are far from perfect, even the best makers have too large a percentage of defective castings; so that users should be very cautious as to which parts of their machines should be made of steel castings. There are many cheap, so called steel castings in the market which are little better, if any, than those made of hæmatite iron.

Output. Judging from the state of trade the last few years, we should infer our output is too great, the supply is in excess of the demand. But if we are to command the markets of the world, we must see to it that our works are turning out their maximum output. The maximum output at the minimum cost. From blast furnace to finished article, we in this country, with very few exceptions, are behind our American rivals.

Use of steel. The use of steel is rapidly increasing, and is supplanting best iron. For steam boilers especially, with the increasing pressure, it is almost universally used. For railways, ships, and many other purposes it has pushed iron aside. It would be well if the user would more frequently take the maker of steel into his confidence, and tell him the purpose for which the steel is required, so that they could confer and

advise as to the quality best suited for the desired end, whether it be supplied as bars, forgings, or castings.

Engineers and others should remember how steel ingots are made, how by imperfect pouring, ebulition of gases, chills, contraction cracks, and many other causes there are many surface defects; these are not welded by rolling or forging, therefore *a liberal allowance must be made for turning to get under these defects.* It is false economy to run the risk of wasters from this cause, the cost of steel is a mere trifle compared with the labour put on it, and, as a rule, the more turned off the cleaner the steel is, whereas the reverse is the case with iron. For rolled bars under three inches diameter an allowance of one-eighth of an inch should be made; from three to four inches diameter, three-sixteenths of an inch; four inches diameter and upwards, one-quarter of an inch; bars five inches diameter and larger sizes, especially when 20 feet long and over, should have an allowance of three-eighths of an inch. Such allowances are necessary to get bright clean shafting bars. The mill scale which adheres to the bars in rolling is often one-thirty second of an inch thick, and sometimes more, and it is necessary to cut below this. In forging, a more liberal allowance is required than for rolled bars, especially if they are at all intricate in shape. All steel that has had any great stress or strain put upon it, should be annealed before using.

Future Discoveries. Much of late years has been accomplished, but there is yet a wide field for investigation, and our young men must not be discouraged, numerous interesting and profitable problems yet require solution. Our thanks are due to many men who by skilful, diligent, patient research, have been the inventors and pioneers of our industries. However learned or clever such men are, after a number of years they seem to become wedded to certain lines of thought and to certain methods of procedure, and it is thus that young men, beginning afresh, looking at things from a different standpoint, have a great chance of succeeding in future developments.

As I began this paper by referring to ancient methods of making steel, I will conclude by reference to the results of ancient work. Iron and steel was known, and its value appreciated, before the separation of the Aryan race. It was used

by the Egyptians 2,200 B.C., and the Chaldeans, Assyrians, Chinese and Indians were skilled artificers when our ancestors were naked savages. From China cast iron hollow vessels have reached us of a combined magnitude and thinness that we have not yet been able to imitate, or even imagine the process by which they have been cast; and razor steel said to surpass all European steel in temper and durability of edge.

The last illustration is a Laht or column, near Delhi, India The height above ground is 22 ft., the total length is over 50 ft., the lower dia. is 16.4 in., the upper dia. 12.05 in., the capital is 3½ ft. long. This pillar weighs upwards of 17 tons, and is of solid wrot *forged iron*, date probably 1500 B.C. How was it made? Near Madras there are beams of forged wrot iron 21 ft. long and 8 in. section. Here then is a fact that at Delhi in the north of India, and at Madras in the south, massive forgings exist, such as all Asia, so far as we know, could not produce at the present day, and of a size rivalling those upon which England prides itself. Experts say all the oldest languages clearly record the use of iron and steel in the remotest period they touch.

The lecture was illustrated by the following drawings and photographs, thrown upon the screen by the oxy-hydrogen light:—

List of Illustrations.

1. Iron Furnace. Khasia Mountains.
2. Osmund Furnace. Sweden.
3. Indian Furnace. Origin of the Blast Furnace.
4. Blacksmith. Bari Tribe.
5. Indian Converting Furnace.
6. Catalan Furnace.
7. Trompe.
8. Trompe and Furnace—Longitudinal and Vertical Section.
9. Catalan Furnace. Showing the mode of raising the lump of reduced iron or steel.
10. Puddling Furnace. Side Elevation.
11. Ditto. Vertical and Horizontal Section.
12. Converting Furnace.
13. Ditto. Elvevation and Transverse Section.
14. Ditto. Horizontal Section, and Basement Plan.
15. Ditto. Longitudinal Section.

16. Tilt Hammer. Small.
17. Ditto. Large.
18. Crucible Casting Shop.
19. Crucible Mould.
20. Bessemer Plant.
21. Converter, Trunions, and Standards.
22. Converter in operation.
23. Bessemer Plant. Crewe.
24. Bessemer Steel Works—Cambria Works. America.
25. Bessemer Steel Works—Germany.
26. Plan of ditto.
27. Open Hearth Furnace.
28. Ditto and Ladle.
29. Ditto. Elevation.
30. Ditto. Section.
31. Ditto Section—End Elevation and Plan.
32. Batho, Open Hearth Furnace.
33. Melting Furnace. F. Siemens.
34. Pile and Bloom Furnace. Ditto.
35. Converter for Basic Bessemer Process.
36. Wilson's Gas Producer.
37. Ditto. Section.
38. Gas Producers. Consett.
39. Ditto. Ditto.
40. Gjers' Soaking Pits. Plan.
41. Ditto. Section.
42. Soaking Pits, Crane, and Ingot.
43. Large Ingot.
44. Hydraulic Crane.
45. Cogging Mill and Live Rollers.
46. Ditto and Bloom Shears.
47. Hot Bloom Shears, and Engine.
48. 32-Inch Angle Mill.
49. 22-Inch ditto.
50. 12-Inch ditto.
51. Plate Mill.
52. Elve Hammer.
53. 5-Ton Steam Hammer.
54. Condie Hammer.
55. 125-Ton Hammer.
56. Details of ditto.
57. Hydraulic Forging Press.
58. Ditto.
59. Ditto.
60. 8 Slides showing fractures of steel.
61. Ancient Forging.

The PRESIDENT (Mr. T. Daniels) intimated that the discussion would be postponed to the ensuing meeting.

Mr. THOMAS ASHBURY (past president) proposed,

That the best thanks of the members be given to Mr. Henry Webb for his paper on Steel and its manufacture, and also to Mr. Councillor Ward (Bury) for the able manner in which he had manipulated the oxy-hydrogen lantern.

Mr. B. A. DOBSON (Bolton) in seconding the resolution, said there was no possible doubt of the fact that the Laht or column, near Delhi, India, referred to by the Author (page 61) was of wrought iron. He himself, when in that district had minutely examined it, with the result that he could readily confirm the statement in the paper.

How the furnaces were erected for the construction of that ingot, in those remote times, there was no indication whatever, but it was certainly a reminder to them of the present day, that progress should be rational, as otherwise the origin of the many interesting current inventions would be similarly unknown to future generations.

The motion was carried with acclamation.

The AUTHOR (Mr. Webb) in a few words acknowledged the vote of thanks, and, at the same time, expressed his indebtedness to the many gentlemen who had assisted him in the preparation of his paper. The reception accorded to him by gentlemen from whom he had applied for information, or for permission to photograph appliances, had been exceedingly kind, and in no instance had his application been refused.

THE MANUFACTURE OF ALUMINIUM.

READ SATURDAY, 27TH JANUARY 1894,

BY

Mr. W. S. SAMPLE,

PATRICROFT.

Aluminium occurs in nature in greater abundance and is more widely distributed than any other metal, but it has never been found in the metallic state. We first find the word alumina applied by Morveau, in 1754, to the substance obtained by calcining alum. Lavoisier first suggested the existence of metallic bases of the earths and alkalies, and alumina was suspected of being the oxide of a metal to which the name of aluminium was given, but this was long before the metal had been isolated or any of its properties determined.

Sir Humphrey Davy, in 1810, tried to reduce the oxide of aluminium by means of the electric current, but did not succeed in isolating the metal. Oerstedt, in 1824, met with partial success in decomposing anhydrous aluminium chloride by means of potassium amalgam. In 1827, Wöhler repeated these experiments without satisfactory results, but did succeed in isolating aluminium, as a gray powder, by heating the chloride of aluminium with potassium, using equal parts of each. This process was somewhat improved by Liebig and Wöhler, and in 1845 the latter published a paper in which he gave the specific gravity and some other properties of the metal, which data was singularly accurate considering the microscopic specimens produced, two globules weighing 32 milligrammes, and the impurities with which the metal was contaminated. This fine metallic powder could not be converted into ingots, and no practical use was made of the process. In 1854, H. St. Claire Deville, while engaged in other experiments, found that he got large buttons of fairly pure aluminium by heating aluminium

chloride with sodium. Deville recognised the importance of his discovery and at once turned his attention to perfecting a process which could be economically applied on a commercial basis. At this time he was Professor of Chemistry at the Ecole Normale, Paris. The results of the first experiments were so satisfactory that the Academy placed 2,000 francs at Deville's disposal to defray expenses in making further experiments, and this may be taken as the beginning of the aluminium industry.

At this time potassium was sold for 900 francs per kilo, sodium was much more expensive, and, both being dangerous to handle, Deville, guided by the successful results of Bunsen in isolating other metals, first attempted the reduction of aluminium chloride by the electric current. Both Deville and Bunsen obtained successful results about the same time, but the process was abandoned at once owing to the large consumption of zinc in the batteries. Deville returned to the alkaline metals to help him solve the problem. Not recognising that his use of sodium was in any way more advantageous than Wöhler's use of potassium, he selected sodium on account of its chemical equivalent being lower than that of potassium, and the cheapness of soda salts. His first work was to devise a process for reducing sodium. Successful experiments were carried out at Messrs. Rosseau Frères works at Glacière near Paris, and the process then worked out continued to be used for many years for the manufacture of sodium.

The attention of Emperor Napoleon III. was attracted by the new metal and he authorised Deville to continue the experiments for perfecting the aluminium process on a larger scale, and at the expense of the Emperor. Deville took advantage of this generous offer and began his work at Javel near Rouen early in 1855.

In the meantime he had been busy studying the problem of cheapening the other materials necessary. About this time cryolite, which is a double fluoride of aluminium and sodium, was brought from Greenland and Deville made use of this mineral in his work. Associated with Deville at Javel for a time were two brothers, C. and A. Tissier, who afterwards induced capital to invest in works near Rouen for the manufac-

ture of sodium and aluminium, but after struggling along for a few years these works were permanently closed. The process finally adopted by the Tissier Frères was the reduction of aluminium from cryolite by means of sodium which process had been described by Percy in England and Rose in Germany in 1855, and by Deville in April, 1856. In the latter part of the year 1856 Deville joined the works at Glacière and began practical work. Owing to complaints about the works they were removed in 1857 to Nanterre and finally to Salindres where the process was continued till within the last few years when new and cheaper processes were established elsewhere.

In 1860 Bell Brothers established works at Newcastle-on-Tyne and made aluminium by the same process used at Salindres. These works continued in operation till 1874 when they were closed. In 1886 the Aluminium Company Limited was started with works at Oldbury near Birmingham, and in 1889 the Alliance Aluminium Company Limited opened works at Wallsend-on-Tyne. Both these concerns used processes already described by Deville, but with such improvements in the manufacture of the materials used that greatly decreased cost of production was anticipated, and no doubt attained. The process worked at Salindres, by Bell Brothers at Newcastle-on-Tyne, and at Oldbury was the reduction of the double chloride of aluminium and sodium by means of sodium, the mixture being exposed to heat either in a crucible or on the bed of a reverberatory furnace. A flux of fluoride of calcium or cryolite was used, the latter giving the better results. The results claimed by Deville in 1859 were as follows :—

	Double chloride of aluminium and sodium	160 kilos
	Cryolite	80 ,,
	Sodium	32 ,,
gives	Aluminium	10 ,,

The above is a maximum charge for a furnace having a hearth one mètre square.

The reaction which should take place is shown by the formula

$$Al_2\,Cl_6 . 2\,Na\,Cl + 6\,Na = Al_2 + 8\,Na\,Cl$$

The amount of aluminium in the double chloride is over 14 %, but from the result shown above it would appear that over 50 % of the metal had not been recovered. However, it may be noted that the weight of the aluminium recovered is about one third that of the sodium used.

At Oldbury with a large furnace having a bed about six feet square the charge of material was:—

Double Chloride - - -	1,200 lbs.
Cryolite - - - - - - -	600 ,,
Sodium - - - - - - -	350 ,,

yielding about 120 lbs. of aluminium, which is about 70 % of the aluminium contained in the double chloride.

The time required for working a charge is about four hours. The furnace is first heated before any of the materials are charged. The double chloride and cryolite are crushed or ground and then the sodium is added and the whole thoroughly mixed. This charge is put into the hot furnace through an opening in the top, all openings being closed as perfectly as possible, and the chemical reaction takes place at once. The heat is then turned on again and the mass kept hot for two or three hours, when the metal and slag are drawn off and the furnace is ready for another charge.

At Wallsend-on-Tyne, where aluminium was reduced from cryolite, the following results were claimed:—

	12	tons of cryolite
	12	,, chloride of sodium
	3	,, sodium
produced	1	,, aluminium

As cryolite contains 13 % of aluminium the process recovered about 62·5 % of the contained metal, but it will be noted that it required an expenditure of about three parts of sodium to one part of aluminium produced both at Oldbury and at Wallsend-on-Tyne. The latter process does not materially differ from the methods described in 1855 and 1856, and practised later by Tissier Frères, near Rouen, except in the efficiency.

Rose only succeeded in recovering about 38 % of the aluminium in cryolite at an expenditure of eight parts of

sodium to one of aluminium recovered. Tissier Frères claimed that the return of aluminium exactly corresponded to the amount of sodium used in reduction, but they did not recover more than 40 % of the metal in the cryolite. The method of operating was to mix the materials in a crucible which was heated sufficiently to melt the mass when the reaction took place and was complete. At Wallsend the cryolite and salt were mixed and charged into a reverberatory furnace and melted, then drawn off into iron pots when the sodium was added to the molten mass and stirred; the reaction taking place at once, the slag was then poured off and the aluminium found at the bottom of the vessel.

The recent activity that led to the formation of the two large companies in England for the manufacture of aluminium was due to the cheaper production of sodium by each company, and the cheaper production of the double chloride of aluminium and sodium by the Oldbury company. Further economy was naturally expected by the work being conducted on a much larger scale than anything previously attempted. One great disadvantage of the chemical processes noted above is the variable quality of the metal produced.

To make pure aluminium it is necessary to have pure materials to begin with, and to perform the reduction with apparatus that will not allow impurities to contaminate the metal. The principal trouble is with iron and silicon which are the elements most commonly found as foreign matter in the raw materials, and aluminium has up to the present time resisted all efforts to refine it. However, the chemical processes have produced metal over 99 % pure, but the average quality is far below this. Beyond details, the chemical processes for the manufacture of aluminium have made no advances upon the work of Deville, Percy and Rose. The present state of the art is due to the use of the electric current, and the progress in this line has been marked by several distinct stages. Reference has been made to the successful results of Bunsen and Deville, who, by means of the electric current, isolated specimens of aluminium from fused double chloride of aluminium and sodium in 1854, but did not make any practical use of the method, owing to the cost of keeping up the battery.

In considering the subject of the reduction of aluminium by means of electricity it may be stated that no successful process has resulted from the many efforts made to deposit the metal from aqueous solutions. Electrical processes were patented from time to time, but the first that appears to have had a practical test was that patented by Grätzel in 1883, which was more novel in apparatus than in the materials used, as his claim was the decomposition of fused cryolite or double chloride of aluminium and sodium using for the anodes compressed carbon and alumina, but none of these points were new. However, the electric current was generated by a dynamo, and the vessel containing the fused materials was made the cathode. This process was operated by a company at Hemelingen, near Bremen, called the Aluminium and Magnesiumfabrik. Considerable quantities of aluminium were made at these works, but the Grätzel process was abandoned in 1887, after which time a method, said to be devised by Saarburger, the director of the works, was used, but no information is given as to this method.

Dr. Kleiner's process, patented in 1886, consists of fusing ground cryolite, packed in bauxite or alumina lined crucibles, by means of the electric arc and decomposing the cryolite by means of the electric current. This process was tried on the continent but finally found its way to England, and was operated for some time at Tyldesley, near Manchester, but was abandoned in 1889. Bernard Brothers, of Paris, patented a process in 1887 for the reduction of aluminium from a molten bath of aluminium fluoride and chloride of sodium. This process has been worked in France, and the published statements of results make strong claims as to its efficiency and economy, but whether the results of working the process on a commercial scale will bear out these claims remains to be seen, as works are in course of erection at St. Michel, Savoie, where water power will be used. An important advance was made in 1885, when the Cowles process for producing alloys of aluminium was patented and works started soon after at Lockport, New York, U.S.A. The claim of the patent is "reducing an aluminium compound in company with a metal in presence of carbon in a furnace heated by electricity; the

alloy of aluminium and the metal formed being further treated to separate out the aluminium."

This process, which was worked at Lockport, U.S.A., and at Milton, near Stoke-on-Trent in England, as used for the reduction of aluminium, was only capable of producing alloys, and not pure metal. The natural oxide of aluminium, corundum, was the ore generally used owing to its greater purity than bauxite, which is the natural hydrated oxide of aluminium. Briefly, the process consists of charging a carbon lined brick furnace with a mixture of carbon, corundum, and the metal to be alloyed, then turning on the electric current which is carried through the furnace by carbon rods entering from either end. An arc is formed, and as the materials are heated the carbon rods are drawn farther and farther apart till the whole charge has been reduced, the intense heat breaking up the oxide, the aluminium alloying with the metal mixed with the charge and the oxygen escaping as carbonic oxide.

Great hopes were entertained for this process, as the valuable alloys of aluminium were produced at a much less cost than had been possible before this time, and for several years it was without a rival. The objections to this process are the impossibility of getting uniform quality of alloys, and the contamination of the alloys with impurities. However, the Cowles Brothers are entitled to the credit of having made the first successful advance after Deville in the aluminium industry.

In 1887, Heroult, a Frenchman, patented a process for producing "aluminium, aluminium bronze, and other alloys of aluminium by electrolysis." The method of producing pure aluminium was to fuse a mixture of cryolite and alumina in a carbon crucible, and to pass an electric current through the fused mass, using a carbon rod for the anode and the carbon crucible for the cathode, when the alumina is decomposed, the aluminium falling to the bottom of the crucible and the oxygen going to the anode and escaping as carbonic oxide. The anode must be renewed from time to time, and alumina added to the fused bath to replace that decomposed. The method of producing alloys of aluminium was to melt the metal in a carbon crucible by means of an electric arc, the anode or positive pole being a movable carbon rod, and adding alumina by degrees without

any flux. The arc fuses the alumina which is decomposed, the oxygen escaping as before, and the aluminium forming the alloy. This process was first exploited by the Société Metallurgique Suisse, at Neuhausen, Switzerland, water power being got at this point from the Rhine.

In the latter part of 1888 this company was merged into a new one, called the Aluminium Industrie Actien Gesellschaft, which put up new and enlarged plant. In 1889, the Société Electro-Metallurgique of France began operating the Heroult process at Froges, Isere. These plants were projected for the manufacture of aluminium alloys, but the alloy process appears to have been abandoned, and the pure metal process adopted.

The Hall process was patented in the United States of America in 1889, and consists of dissolving alumina in a fused bath of aluminium fluoride, and the fluoride of a metal more electro-positive than aluminium, and decomposing the alumina by passing an electric current through the bath.

This process was first worked by the Pittsburgh Reduction Co., of Pittsburgh, Pennsylvania, U.S.A., in 1888, and in 1890, works were started in England by The Metal Reduction Syndicate Limited, at Patricroft, near Manchester.

As the electrolytic processes operated at present are very similar, the method of operating the Hall process may be taken as representative of the art at the present time.

Given an electric current of large volume and small tension, a number of carbon lined steel pots are placed in series in the circuit, the pots forming the negative pole or cathode and carbon rods attached to adjustable copper rods forming the positive pole or anode. The circuit being closed, by making contact between the carbon rods and the carbon lining of the pots, the current is turned on and electrolyte added to each of the pots. The electrolyte is soon fused by the heat generated by the resistance of the pots to the passage of the current and when sufficient bath has been fused alumina is added and the decomposition begins, the aluminium going to the bottom of the pot, which is the negative pole, and the oxygen going to the positive pole combining with the carbon anode and escaping as carbonic acid gas. When the bath becomes exhausted of alumina or ore the resistance materially increases, as indicated by a meter

attached to each pot, and more ore is added thus restoring the normal working. From time to time as metal accumulates in the bottom of the pot it is either tapped off or ladled out and run into moulds as required. The electrolyte is unaffected by the current, the small loss which occurs being due to volatilisation, and the process once in operation continues for months. The process is essentially a continuous one, working day and night, and the only limit of a run is the necessity for repairs to the machinery, and a holiday for the workmen.

The materials necessary for a pound of metal are—

2 lbs. anhydrous alumina
$\frac{1}{10}$ lb. of electrolyte
1 lb. of carbon

The power required in this process is 18 electric horse power per hour per lb. of metal, although somewhat better results have been obtained. It will thus be seen that power is an important item in cost, and accounts for the exclusive use of water-power on the continent, and the anticipated removal of the plant of the Pittsburgh Reduction Company to Niagara as soon as the turbines of the Niagara Falls Power Company are in place.

At present the electrolytic processes are the only ones used for the production of aluminium, and it does not seem probable that any better or cheaper methods will be discovered, although we are continually hearing of new processes, for which claims are made that the metal can be produced direct from clay or bauxite, at remarkably low cost. During the first few years of manufacture the price of aluminium ranged from ninety to sixty shillings per lb., and from 1862 to 1886 the price was thirty-five to forty shillings per lb. Soon after the latter date the Aluminium Company Limited, with works at Oldbury, came into the market with the metal at twenty shillings per lb. The price was soon lowered by the competition of the Alliance Aluminium Co., Limited, with works at Wallsend-on-Tyne. These two Companies were soon forced out of the market by the Companies at Neuhausen and Pittsburgh, which began selling the metal at about eight shillings per lb., and have since, owing to the larger consumption of the metal and the consequent

decreased cost of production, been able to so reduce the selling price that it is now, volume for volume, but little more expensive than copper.

As the many valuable qualities of the metal have led to the belief that the price was the one obstacle to its extensive use, and as the compounds of the metal are found so universally and abundantly in nature, there has been no lack of investigators seeking to reduce aluminium by chemical means, but so far the sodium process has been the only one which would give the desired results. As noted above, it requires three tons of sodium for one ton of aluminium by either of the sodium processes, so it is easy to see why these processes are unable to compete.

As all clays contain a large percentage of alumina, it is a popular fallacy that aluminium is reduced from clay. The ore used is pure anhydrous alumina which contains 52·94 % of aluminium, and in practical working less than two tons of this material are required for one ton of metal, so that the efficiency as regards the ore is perfect.

The development of the electrolytic processes for making aluminium created a demand for pure alumina, and manufacturers have succeeded in supplying an article over 99 % pure, the 1 % being made up principally of water and silica. Pure carbon electrodes were necessary, and these are furnished with a fraction of 1 % of ash. The result is that aluminium is made so that the entire product is over 99 % pure, which is much better than the regular results obtained by the chemical processes. As the methods at present employed consist of the direct reduction of the oxide of the metal, it does not seem possible to have a more simple process, and not probable that a more complicated compound can be treated in a more economical manner. It may be inferred, therefore, that further cheapening of aluminium will depend upon the greater consumption of the metal and also upon cheaper power and materials, and the consequent decrease in the average general expenses with greater output. The present total output of pure aluminium is between four and five tons per day, which is more than the annual production up to 1886. This rapid increase in production has been due primarily to the decreased selling price which encouraged consumers to make practical use of the metal. The present

consumption may be graded into three classes, each of which takes about equal parts. These are iron and steel, brass and bronze, and pure metal.

The best testimonial is the continued use of the metal, and this is given by both iron and steel makers, and brass and bronze founders. The properties of aluminium have been greatly exaggerated, and as greatly depreciated, by many writers whose chief ability seemed to be their desire to appear in print. Notwithstanding the difficulties in perfecting a new process, and in introducing a new metal, aluminium has obtained a place among the metals of ordinary and daily use, and its position is continually being made more secure by a further appreciation of the uses to which it has been put successfully, and by new uses for which it is almost daily being introduced.

In using aluminium for steel the amount varies from one-third to three-quarters of a lb. to a ton of steel, the result being sound ingots or castings free from blow holes, and a decrease in scrap and wasters. A further advantage is that a milder steel can be used for castings.

Wrought iron castings have been made by the Mitis process, which depends upon the use of aluminium, but the variable results obtained have not led to the general use of this process, although it has not been abandoned.

The use of aluminium with cast iron produces sharper and cleaner castings, free from blow holes, and gives a more uniform casting. The iron is made softer, with less tendency to chill, part of the combined carbon being converted into graphite.

The amount of aluminium to be added to cast iron varies with the quality of the iron, but one to two lbs. to the ton of iron gives good results. Too much aluminium is apt to be worse than none at all, and while it does useful work in cast and wrought iron and steel, its presence in the finished metal is not wanted.

This is not the case with the copper alloys where aluminium is used to great advantage up to 10 %, beyond which the alloy becomes extremely hard and brittle and loses its valuable qualities.

Aluminium is used with all the well known brasses and bronzes with beneficial results in quantities up to 1 % for de-oxidising or purifying the mixture, and its presence in the finished product is not detrimental. The result of these small quantities of aluminium is to produce cleaner and stronger castings.

While copper and aluminium alloy in any proportion, the useful bronzes do not contain over 10 % of aluminium. These bronzes vary in strength and physical properties, but all of them can be forged hot or run into sand castings. Castings of 10 % bronze are much like rolled mild steel, having a tensile strength of 26 to 28 tons per square inch, and an elongation in 2in. of 25 to 30 %, but with a specific gravity of 7.5, while steel is 8.0. The 5 % bronze is much softer and less strong having a tensile strength of 17 to 18 tons per square inch, and an elongation of 60 to 70 % in 2in. Many different qualities of aluminium brass are made but the best give tensile strength from 30 to 35 tons per square inch, and elongation from 6 to 15 % in 2in., as required.

There are no copper alloys without aluminium which approach those containing aluminium, and from the physical properties noted above it will be seen that sand castings can be made equal to wrought iron forgings, and with a material which is not consigned to an almost valueless scrap heap should an accident occur to the part. Increased tensile strength is obtained in the bronzes by the addition of silicon, but it is at the expense of elongation.

The pure metal is used as such for many different purposes in castings, sheets, tubes, and wire. The malleability of the metal is such that it can be beaten into leaf, which has largely replaced silver leaf.

The shrinkage of pure metal is about ¼in. to the foot, but castings are usually hardened, so as to get increased strength and to allow machining, and the shrinkage decreased.

The pure metal is quite soft and in castings has a tensile strength of about 8 tons per square inch, while the hardened metal has a tensile strength of about 12 tons per square inch, and is as hard as gun metal. Sheet and wire are much stronger than castings, depending on the amount of work done on the ingot metal. As no satisfactory solder has been found for

aluminium its uses are restricted to work that can be cast, stamped, spun, drawn, or riveted, yet with this drawback the applications are numerous when there is a disposition to use the metal. Aluminium cooking utensils have found favour wherever tried, and are at present supplied by several makers.

It was not intended to go into the question of the properties and uses of aluminium; the actual, not possible, applications noted being merely for the purpose of showing that the metal has within the last five years made a permanent place for itself in the metallurgical world, and that the rapid development of the uses of the metal may be considered unique. A few specimens are exhibited showing the natural bauxite, the anhydrous alumina prepared from the bauxite, natural cryolite, and a few pieces of aluminium in various shapes.

DISCUSSION.

The President (Mr. T. Daniels) remarked that now they had heard detailed the various properties of this remarkable metal, he hoped that the members present would submit their views regarding the same.

Mr. Joseph Adamson said he was rather disappointed at the views expressed by the author as to the probable future output of Aluminium. He might say that recently his son was in the States where he was introduced to Capt. Hunt the President of the Pittsburgh Reduction Co. His son told the President that they were going to make an aluminium boiler as soon as the price of the material was reduced considerably per ton, say something relative to that of steel. Since that time considerable correspondence had passed between the speaker and the Pittsburgh Company, and from this correspondence, it appeared that the Company are now producing plates of nearly pure aluminium, having a tensile strength of 50,000lb. per square inch, or if necessary 55,000lb., an elastic limit of 35,000lb., with a reduction of area of 20 per cent., or, in other words, with an elastic limit equal to that of good soft steel, which is

three times as heavy. At present the Company are rolling plates up to 30in. in width, and are prepared to supply ingots at a cost of about 2s. a pound, which can be rolled to the same size as ordinary steel boiler plates.

He (Mr. Adamson) ventured to say that in a few decades our great grandchildren would laugh at our present methods of using a metal so oxidisable as iron. He was extremely sorry to learn that the author thought there was not going to be a large output of aluminium. In this country, however, as we had not the means of adopting water power to any extent, it would be more and more necessary to obtain cheaper engine power to produce this metal. Assuming that the material could be produced cheaply and suitable methods of welding adopted, there was no doubt we should have a metal which would not oxidise and which would last for an indefinite length of time.

He was exceedingly glad to hear Mr. Sample's able paper and he hoped that English capitalists would take up the question of manufacturing and achieve successful results.

Mr. Samuel Dixon (Past-President) remarked that with regard to the cutting of aluminium he had found that the metal behaved very curiously when put under a milling tool. It seemed to "yield" from the tool and get up an amount of friction which made it exceedingly difficult to cut. He was afraid that Mr. Adamson would not readily realize his ambition of having aluminium cheap enough to be able to manufacture a boiler of it. He thought that in all the compounds of this metal known to exist in nature the molecules were held together under such conditions that it would require a tremendous amount of energy to separate them, and such expenditure, of course, meant a certain amount of money, in whatever form it was applied. At the same time, however, the metal might be useful, say in torpedo manufacture where lightness was of great moment.

Mr. C. H. Collier said that some two or three years since he had under his supervision some machines for fustian cutting made of aluminium. Apparently they were very good castings and free from blow holes. Being very light they were a good substitute for cast iron for the purpose for which they were

required. As regards drilling and general machining, he experienced no difficulty, but milling was not so satisfactory.

Mr. ALEX. GEM remarked that the author in speaking of aluminium when alloyed with copper, had shown that there was a great increase in the tensile strength of the alloy over either of the metals taken separately; the speaker wished to know whether it had a similar effect when alloyed with steel, viz.:—to increase its strength. If the author would enlarge upon its effect on steel castings, and if possible give some results of tensile tests, it would be acceptable.

The PRESIDENT observed that it was satisfactory for them to learn that Mr. Adamson contemplated making boilers of the metal. It was an Adamson who was the pioneer of steel boilers and it would be history repeating itself if an Adamson was the originator of Aluminium boilers.

He would like to ask what action took place when aluminium being put in steel, the blow holes disappeared. Likewise when it was put in cast-iron scrap, thereby improving its quality?

Mr. W. H. FOWLER asked what was the relative conductivity of aluminium as compared with other metals, as in its application to steam boilers this property would be an important factor in determining its commercial value.

Mr. R. R. LISTER said it might interest the members to learn the results of a few experiments which he had the pleasure of conducting at the works of the Broughton Copper Company Ltd. on behalf of Mr. Sample, in Rolling Rods and Sheets, and also in drawing Seamless Tubes from ingots of practically pure Aluminium, these ingots being made by the Syndicate with which Mr. Sample was connected. It was found that the ingots as received—which measured 2in. diameter and about 30in. long—were soft and exceedingly ductile, and were capable of being rolled cold down to ⅛in. diameter, and also into extremely thin sheets without being annealed. A number of tubes of various sizes were drawn cold, the smallest being about ¼in. bore by 15 to 20ft. long, and, as before, the metal did not require annealing during this operation; it was noticed during these trials

that although the metal was soft and ductile in the sense that there was no necessity for annealing, there was still a peculiar stiffness of structure and resistence to flow which necessitated the application of greater power than was usual with copper or the usual brass alloys.

In hot rolling considerable care was needed to avoid overheating, it was found that if the temperature of the ingots was too high they crumbled in the rolls, breaking into small pieces having a coarsely crystalline fracture: when the ingots were heated sufficiently to discolour a white pine stick, the most satisfactory results were obtained. No difficulty was experienced in cutting the metal with the usual quick running saws used for copper; in boring the ingots preparatory to drawing tubes, a high rate of speed with a light cut and a keenly-ground tool having ample clearance together with a plentiful supply of water to wash away the cuttings, were found to be the most efficient.

Mr. James Hartley said that on account of the greatly increased steam pressures, cast-iron was hardly suitable for steam pipes. If, however, by the application of aluminium the tensile strength of cast-iron could be increased, he could not see why it should not be still used for steam pipes, and it would then considerably reduce the cost of installation for boilers, etc. At the same time he did not think the cost of the motive power for producing aluminium would be so great, considering that 1¼lbs of Lancashire coal would produce one HP, and that it only took 18 electrical HP to get a pound of aluminium. In his opinion the cost of fuel would not be an important factor, assuming that high-pressure boilers and the most modern type of engines were adopted. Again, the continuous running, or at least running with practically few intermissions, would reduce the average cost per HP.

Mr. Thomas Ashbury (Past-President) said the subject of aluminium was of surpassing interest, and unique in the fact that it had never previously been brought before the Association, and it had certainly been described in a most lucid manner by the author. Aluminium, as indicated in the paper, was only of comparatively recent date, some forty years ago being its

actual birth, at least as far as it was concerned as an industrial metal.

It might be mentioned that when a sample of Deville's production was submitted to Napolean III., the Emperor came to the conclusion that it would be an excellent metal for the manufacture of cuirassiers armour, and he advanced money to Deville for experiments in that direction. The question of the reduction of values was very prominent in this paper; take for instance that of sodium, which at one time was costing from £30 to £40 per lb., and four years subsequently was quoted at 4/- per lb. The Aluminium Company, with which Sir Henry Roscoe was somewhat identified, had its original capital of £400,000 reduced to £80,000 simply because the sodium process adopted by the company could not hold its own with the electric process described to-night.

It might not be inappropriate to mention that when the President of the Pittsburg Reduction Company was in England in 1889, he had the pleasure of making his acquaintance, and subsequently when in America he saw the whole process of the manufacture of this aluminium. The author of the paper (Mr. Sample) was, on account of his exceptional knowledge, specially selected by the company as their representative in this country, and he simply mentioned the fact to show that the author of the paper was an exceptional authority on his subject. Undoubtedly if the adoption of aluminium was to progress it must be produced cheaply. Recently a member told him that by using aluminium in his cast-iron he had 80 per cent less scrap than before, besides having sharper, cleaner and sounder castings. There was no doubt that the aluminium now being produced under the Hall patents, by Mr. Sample, at Patricroft, was of such purity that its effect could be told to the greatest nicety. In conclusion, he had pleasure in expressing the indebtedness of himself, and probably of all the members, to the author for having so clearly given to them the results of his experience in the perfecting of what possibly might be the coming metal.

Mr. Sample in replying said that Mr. Adamson had mentioned a point which he had not anticipated, namely the probability of

a large output of cheap aluminium. He must say, however, that it had not been his intention to dilate upon the future of aluminium, but simply to record what had been already done. The future output could be made either large or small, according as they pleased. The manufacture of the metal commenced in 1888, beginning with a plant capable of turning out 50lbs. per day. The metal then was not much more than 60% pure, but they were pleased even to make it in that state. The output at the present time was from 4 to 5 tons per day, and considering that the increase had taken place in the past five years, he thought they might fairly say that it was unique. As a matter of fact, he did not think it necessary to anticipate, because they believed they had done good work and made great progress. If the demand came, with Niagara at the back of the dynamos he thought it could be readily met.

Mr. Hartley had remarked that a horse power could be generated with 1¼lbs. of coal, at say 6s. per ton, but he (Mr. Sample) fancied that coal at that price was not the quality which makes a horse-power, with the expenditure of 1¼lbs. of fuel.

Water power while having many disadvantages, had at the same time many advantages, one especially being its uniformity. In the manufacture of aluminium stops were very expensive. A stoppage of ten minutes meant a delay of a couple of hours before the chilled pots could be got again in their original state. Generally speaking, he believed that water power would produce the most economical results.

As regards the welding of aluminium, that could be efficiently done by electricity, and was simply a question of adaptation of machinery.

With respect to the machining of aluminium, Mr. Collier had partially answered that question, but he might remark that the castings referred to were so made that they would machine.

In reply to Mr. Fowler's question as to the conductivity of aluminium, the co-efficient of thermal conductivity is 38-87, silver being 100 and copper 73·60; the specific heat is 0·2185, water being taken as 1. Silver being taken as 100, the electrical conductivity of aluminium is about 54.

The milling of aluminium had been mentioned, and in reply he might say that the pure metal was very soft and would probably clog the tool in most cases. The turning of aluminium could be readily effected, principally with a copious supply of cold water, though sometimes oil was used. At the same time water was about the best thing for use in turning.

It had been asked what was the effect of aluminium on cast iron. Aluminium did increase the strength of cast iron indirectly, but not if the cast iron was of the best quality. It would remove the blow holes and make stronger and better castings. The effect also depended upon the composition of the iron; if it were a high carbon iron, a large part of the combined carbon would be converted into graphite, and given an opportunity some of it would escape, the iron being made much sounder thereby. It was entirely wrong to assume that aluminium made cast iron stronger, in the ordinary acceptation of the term. Its effect was not to impart new elements of strength as regards the composition of the iron, but simply as indicated to remove blow holes or other defects in iron or steel.

In reply to the query as to the effect of aluminium on cast steel, he could only refer them to an important contribution on that point made by Professor Arnold of the Sheffield Metallurgical School, read in February, 1892.

With regard to the tensile strength of aluminium, the pure metal averaged about eight tons and the hardened metal ran up to about twelve tons per square inch.

The crucibles for aluminium were durable, and would, in most cases, last for years.

On the motion of the President a cordial vote of thanks, by acclamation, was passed to Mr. Sample, which he briefly acknowledged, and the proceedings terminated.

APPLICATION OF HYDRAULIC MACHINERY TO THE MANCHESTER TRADE.

READ SATURDAY, 14TH APRIL, 1894,

BY

MR. GILBERT LEWIS, M.I.Mech.E.,

OF MANCHESTER.

In 1795 Joseph Bramah, of Pimlico, invented the Hydraulic Press which he described as "a new invented method of "producing a more considerable degree of power to all kinds of "apparatus;" and in 1802 he wrote the following letter to his friend, Robert Mallet:—

"I think very much may be done in Ireland in the press way if the excellency of the principle was but known. I have also now applied it with most surprising effect to every sort of crane for raising and lowering goods in and out of warehouses. So complete is the device, that I will engage to erect a steam engine in any part of Dublin, and from it, convey motion and power to all the cranes on the quays, and elsewhere by which goods of any weight may be raised at one-third of the usual cost. This I do by the simple communication of a pipe, just the same as I should do to supply each premises with water. I have a crane on my own premises which astonishes every person to whom it has been shown; as they see the goods ascend and descend, fifteen or twenty times a minute, to the height of fifteen or twenty feet, and at the same time it is impossible for any person unacquainted with the principle to discover how or where the power comes from. I also show them pumps raising water with huge force, and a press squeezing wool, &c., to atoms; and not the smallest discovery can be made of the cause. I believe I shall have all the craneage of the London Wet Dock Warehouses to undertake which would be the grandest job ever done."

This letter was written 92 years ago, and in it we have not only the first conception of a power, which in the writer's view was about to dwarf all the then known powers, but also the first conception of centralising that power, and making it available for many and distant stations. Bramah was fully convinced of the success of the principle he had introduced, but his astonishment would indeed be great, could he now see its extensive application. A power so soft, so gentle, and yet so huge; it can drive the delicate machinery for a dentist or launch a Great Eastern.

Yet the principle although a success from the first was not immediately recognised as such, and not until 1847 did Lord Armstrong erect his first Hydraulic Crane; and strange as it may seem, 30 years subsequently, only 89 of these were found to be working.

Before proceeding to give a description of the various installations of hydraulic powers and of Manchester in particular, a cursory glance at the history and introduction of various hydraulic machines at present in use in Manchester may prove interesting. Machines which may have to be worked or superseded by the Manchester hydraulic power. Manchester has been said to be the home of the hydraulic press as well as the Metropolis of hydraulic power. And, with good reason, for in a very restricted area, there are upwards of 600 presses and hoists innumerable at work. During the rapid increase of our export trade, the small 6in. presses with hand pumps soon gave place to those of higher power, supplied with steam pumps, and though the advance was somewhat checked by the limit to which cast-iron cylinders could be safely used, the successful introduction of steel, leaves any size of cylinder that may be required, practically unlimited. As a consequence we find presses now working in Manchester with cylinders of 14in., 18in., and even 20in. diameter for packing purposes. The standard of freight charges being upon 40 cubic feet to the ton it is to the interest of the packer to obtain or even exceed this weight measurement, but at the same time to accommodate the pressing to meet the requirements of the various markets. Calcutta prefers dense packing, as the purchaser likes to feel something hard and firm for his money. Bombay prefers

moderate pressure, but to this China and Japan decidedly object on the plea that it injures the material. Whether high pressure in baling goods or cotton, does really injure the material is doubtful, and probably the truth lies in the injury caused by tearing the material when opening a closely packed bale.

PUMPING ENGINES.

It is evident that in the compressing of any material, the pressure will vary as the density; and that at the preliminary stages a large quantity of water will be required at a low pressure, and at the final stages a small quantity at a high pressure. This curve of pressures will vary with every material pressed—the harder material requiring less low pressure and more high pressure than material of a softer texture. The nearer we can design machinery to vary itself to these required pressures, the more economical is the result. But no such machine automatically accommodating itself to the varying curve of pressures has yet been designed. The nearest approach is a series of several small vertical pumps of varying diameters, some of which are knocked off at fixed or given pressures, the pressures then due to their varying working areas being an approximation to the required curve. Much can be said in favour of this class of pump; for instance, their approximation to this curve, their facility for repair, and the possibility of one or more pumps being disabled without actually stopping the machinery. But the churning of the water, the many and rapid beats of the valves, and the constant running of a large pair of engines, especially if driving the hoists and jiggers by strapping, all add to friction, and cannot be said to be economical. Many plants are still working in Manchester on this principle, and when in conjunction with hydraulic hoists and an accumulator, the latter regulating and even stopping the engines, the loss by constant running is avoided.

DIRECT-ACTING PUMPS.

Direct-acting pumps are those which are in direct line with the cylinders and of the same stroke. This system was first introduced in the warehouse of Sam Mendel, Esq., by Messrs. Nasmyth, Wilson, & Co., of Patricroft, and with marked success. The engines were fitted with 20in. cylinders and 1¾in.

ram pumps, both cylinders and pumps being 22in. stroke. This example was quickly followed by other makers, and there are now many engines of this description working in Manchester (Plate 1).

The best example may be found in the firm of Messrs. Barbour Brothers, this plant being also made by Messrs. Nasmyth, Wilson & Company. There are two sets of engines, one set of low pressure engines fitted with a pair of 18in. cylinders and four 2¾in. pumps, working directly into an accumulator and governed by it. The other set—high pressure engines—fitted with three 15½in. cylinders and six $1\frac{5}{16}$in. pumps, all 18in. stroke, delivering into and constantly retaining high pressure water in the supply main. By this method the engines are at rest, and only work when the pressure against them is relieved by opening the low or high pressure stops of the presses. This firm had previously a plant on the old system, but the alteration to the direct-acting principle has considerably reduced their coal bill.

The direct-acting principle reduces the number of parts, also the excessive churning of water and the number of valves and their beats per minute. But since in the example given there are but two changes of pressure—viz., half ton from the low pressure pumps to three tons from the high pressure—it does but approximately accommodate itself to the curve of pressures, and therefore the result is a corresponding loss.

THE DUPLEX PUMP.

The Duplex Pump has been introduced during recent years. It is a convenient and reliable engine for low pressure, which is usually 10 cwt. when used in connection with an accumulator. Like all pumps of this class, taking steam through the whole stroke, and that stroke not very certain, they are immense steam eaters, and therefore not economical.

THE GAS ENGINE.

Much may be said in favour of driving small plants by Gas Engines; certainly their economy cannot be questioned, and if the makers could produce, say a pair of engines automatically stopping and starting when required, it would be very much greater. To this point, however, I will refer later on.

THE ACCUMULATOR.

The Accumulator or Storer, as its name implies, accumulates or stores up any surplus power, that would be lost, owing to the intermittent demand of most hydraulic appliances; but it has also another valuable function, namely, it is a great maintainer and equalizer, of any desired pressure.

The Accumulator was first introduced by Lord Armstrong, and it is to his genius we owe the invention and successful introduction of so many beautiful hydraulic machines, too many, in fact, for us to attempt their innumeration. In its simplest form the accumulator is a long hydraulic cylinder, the ram of which (usually 10 to 12 inches in diameter) is weighted with cast-iron slabs, or a cistern filled with slag. In its more elaborate form we have the Differential Accumulator, in which there are three or more rams of equal or different diameters (Plate 4). Supposing such an Accumulator arranged for our Manchester work, we should then have an Accumulator and an Intensifier combined. The action would be as follows: The low pressure from the pump or Town's Mains would first be admitted to all three cylinders to lift the dead weight, giving, say a pressure of 10 cwt. per square inch, and on the return stroke the pressure due to the weight on the three rams would first be admitted to the press, and then by knocking off the two outer rams, either automatically or otherwise, the pressure due to the weight on the single central ram would finish the bale. The system would be costly, but it would be simple, certain, and very rapid.

THE INTENSIFIER.

It would be thought, from the immense magnitude and importance of our hydraulic system in Manchester, that we should have been early in the field with some centralising installation; but we were first met by the difficulty of pressure. Hull, London, and Liverpool, to supply the needs of their cranes, hoists, lifts, &c., were satisfied with 700lbs. per square inch; but in Manchester for our hydraulic presses we must have a pressure of not less than 2¼ tons per square inch. It was not, however, until the introduction of the intensifier by Messrs. E. T. Bellhouse & Co. that some centralising system was seriously considered. It may be not out of place to mention that the history of the intensifier is as follows:—In the year 1869

George Ashcroft, certainly the pioneer of invention in this class of machinery, describes his patent intensifier thus:—

"First I construct a cylinder, and in that cylinder a piston, made to work along its length, water-tight, under considerable pressure. Attached to this head or piston is a rod or plunger which fits the neck of the second smaller cylinder, so placed on a common axis that the piston with its rod moves up and down through their respective cylinders freely. If water from an ordinary accumulator be admitted below the piston of the larger cylinder, it will cause the same to move along the length of the respective cylinders. If the smaller cylinder be kept filled with water a pressure will be communicated thereto, and is increased in the same proportion that the area of the larger cylinder exceeds that of the smaller."

Here we have the father of the intensifier principle, and all subsequent patents are but modifications of arrangement. In 1878 Messrs. S. J. Best and W. J. Marshall patented their system of one large cylinder and ram, working a smaller inverted cylinder and ram directly in line.

In 1886 Messrs. E. T. Bellhouse & Co. patented a similar arrangement of inverted cylinder and ram.

In 1886 Messrs. J. Leming & Co. patented a double-acting intensifier, and also show the fixed inverted hollow small ram and the moving central ram, the latter acting both as ram and cylinder for the smaller ram. This was certainly an improvement, as it reduces the length of the apparatus and yet retains the stroke, and at the same time saves the cost of the smaller cylinder.

In 1888 Messrs. Bellhouse also patented a similar arrangement. Many other patents followed, most of them being on the same lines as those described.

It is a reflection, I consider, on our patent system that so much energy and money are constantly being wasted by these repetitions of the same idea. In fact, it seems to me, that you may patent anything so long as you pay the fees.

An ingenious attempt to approach the curve of pressures is shown in the very recent patent of Mr. W. W. Dack, of

Patricroft (Plate 2). On reference to the drawing, it will be seen that Mr. Dack has applied a system of toggle levers to two hydraulic cylinders, suitably carried and swivelling in a frame. The larger or power cylinder having a ram 15½in. diameter, 3ft. 6in. stroke; and the smaller ram, on which the pressure is intensified, being 9½in. diameter 3ft. stroke. From the action of the toggle levers during the stroke, a gradually increasing pressure takes place in the smaller cylinder, culminating when the levers approach their vertical axis. The action is as follows—viz., water from the main is first admitted to the 9½in. ram, which, on its rise, forces back the 15½in. ram of the Power Cylinder; and from thence forces the water into the press, taking up the slack, and also compressing the bale with a terminal pressure of 500lbs. per square inch. The action is then reversed, the water from the main being admitted to the 15½in. ram, and the pressure intensified on the small 9½in. ram; and from thence to the press, finishing the bale. In the comparison for capacity and economy, a Direct Acting Intensifier, with a 9½in. ram would, if supplied with the town's pressure of 1,000lbs. per square inch, require at least a power ram of 24½in. diameter, whereas by Mr. Dack's system the 9½in. ram requires only a power ram of 15½in. diameter, in fact saving one-half of the power water. It would be necessary in this design that a margin of pressure should be allowed somewhat above the ordinary working pressure; otherwise, the amount of water delivered at the full working pressure being but small, might necessitate two or three short extra strokes to compress some bales. However to meet this, Mr. Dack suggests, that a small supplementary accumulator be attached to the 9½in. cylinder and in connection with the press, which would act as a safety valve, and also allow a considerable range of terminal pressure.

This system, though at first view is somewhat complicated, yet possesses such merit that I think it may have a future.

One of the best examples of a differential intensifier may be found in the arrangement of an Ashcroft Cotton Press—where the bale is made with two strokes of the piston. The first or up stroke, directly lifting the rams into the box, and the down stroke bringing into action eight pumps of varying diameters.

These pumps may be knocked off in pairs, so that no less than seven different pressures can be obtained if required.

The Bellhouse Intensifier being generally known in Manchester I will describe its action (Plate 3). Being single acting, the high pressure can only be obtained by the up stroke; and consequently on the return of the ram, as the slack water, as it is termed, must either be run to waste or made use of in the press, it takes up that amount of clearance between the goods and top of the press which we may call slack. It also does some amount of pressing, as the pressure due to the small ram on the large one is about 200lbs. There are, therefore, two methods of working this single acting intensifier; with, and without the use of the slack water. The valve gear may vary considerably in its arrangement—the most simple when the slack water is not made use of, being a single stop and let-off valve in connection with the larger ram, and the accumulator or town's pressure. In this arrangement the pressure is constantly retained upon the small ram. Assuming the large ram to be at the top stroke, on releasing the pressure on the large ram, the pressure due to the area of the smaller ram forces out the slack water to waste. On reversing the action and applying the pressure on the large ram, the pressure becomes intensified in proportion as the larger ram is greater than the smaller. These alternating valves may be made to work automatically, but as a rule, the attempt to make any machine do too much generally results in trouble. Again, let us examine the action when the slack water is made use of. Mr. Bellhouse claims a triplet action in connection with his intensifier. The valves Q. and M. are inverted weighted valves. X. Y. Z. being back pressure valves. Presuming the larger ram is at the top of the stroke. In the first action the pressure is admitted to the smaller ram and forces the slack water into the press until such a resistance is met that the inverted valve (M.) opens, and in the second operation admits the pressure directly upon the full area of the packing press. The third action takes place when the still heavier weighted valve Q. opens, and admits the pressure upon the large ram which continues to rise until the desired pressure being obtained, the operation is finished.

The arrangement is very ingenious, and is most economical in action, but there is also the element of time to be considered. In practice it is found that making these changes cause a loss of time, and it is better to use a little more water and turn out more work.

The Intensifiers, as described above, are single acting, and in consequence time is lost in the return of the ram, and a greater loss takes place when, as sometimes happens, the bale is not completed at the full stroke, but a part of a second has to be taken. To overcome these difficulties, Messrs. Nasmyth Wilson & Co. have introduced their double-action Pump Intensifier (Plate 5). It has the merit of being double acting, and also the economical advantage of using the power water upon the power rams only, the smaller rams drawing their water from the return cistern. It has also this advantage, that the pressure can be retained upon the complete range of high pressure piping, the same as is at present in use upon the low pressure. By this means, one or all of the presses in connection with the system can be worked at the same time.

It cannot be said that the Intensifiers, as described, are perfect, because undoubtedly there is still a field for a more efficient design. It must be simple, for the tendency of this economic age is to make the Packer and the Labourer into mechanics and to avoid all expensive supervision.

CENTRAL HYDRAULIC POWERS.

About 30 years ago, Sir William Fairbairn, in reply to a communication from Professor Robinson, wrote as follows:—"Your proposal to erect steam engines and lay down pipes for the purpose of working Accumulators for supplying hydraulic power to various localities of the City of Manchester, seems to have several advantages over the system now in use in the different warehouses where steam is employed.

"In the first instance, it would remove steam engines and boilers from the premises, lessen the risk from fire, boiler explosions; and, secondly, it would supply the necessary power to work cranes, hoists, hydraulic presses, etc., in those depôts on principles of increased security."

Sir William might have added, the cost of maintenance, supervision, and insurance would be decreased; space economized, and rent reduced; and yet, with all these advantages, Manchester has been reluctant to try a power which did not seem to offer all that was required.

If our Civic Power had not stepped in with its free purse, many more years might have elapsed before we saw its introduction.

To Mr. Ellington, of the firm of Ellington and Woodall, Engineers, London, the credit must be given of practically and successfully carrying out most of the Power Installations of any importance in England. Hull, London, Liverpool, and now Manchester, will be monuments of his work.

The one established at Hull, in about 1877, was a trial scheme, comprising at first about 3,000 yards of piping, the pressure supplied being 700lbs. There were two pairs of horizontal engines working double-acting pumps capable of delivering 130 gallons per minute; one accumulator 18in. diameter, 20ft. rise. A third engine has since been added and a further extension of mains.

The success of the Hull scheme led to a more extensive development in London in the autumn of 1883. The first installation was at Falcon Wharf. In describing these engines and pumps, I may say that they are a type similar to that engine supplied to recent installations, being, in fact, all made by the same firm, the Hydraulic Engineering Company, Chester.

There are four sets of vertical compound engines at Falcon Wharf, the central cylinder being 19in. and the two outer 25in. diameter, all 24in. stroke. The pumps, one to each cylinder, are 5in. diameter, of the same stroke in direct line. Each set at 250ft. piston speed, will deliver 300 gallons per minute against a pressure at the installation of 750lbs. There are two accumulators, 20in. diameter, 23ft. stroke. The varying speed of the engines, owing to the intermittent demand and supply, is naturally detrimental to coal economy; but in a nine hours' trial—55·35 revolutions per minute—the result was 2·19lbs. per indicated HP per hour, but generally in ordinary work 2·95lbs. per indicated HP per hour. The introduction of the triplet

engine has, I understand, much reduced this consumption, particulars of which I regret I am unable to lay before you.

The hydraulic plant in London consists at the present time of 13 sets of engines similar to those at work in Manchester. Six further sets are now being made, so there will be 19 sets in all.

BIRMINGHAM HYDRAULIC POWER.

Birmingham has a small hydraulic installation of three "Otto" Gas Engines, which drive three sets of triple hydraulic pumps, the pressure being 730lbs.

LIVERPOOL HYDRAULIC POWER

This power was established in 1888. There are three compound engines, one 19in. and two 25in. cylinders, 24in. stroke, the pumps being 5in. diameter. There are about 19 to 20 miles of piping, and about 340 different machines now working from this plant. The 18in. accumulator is weighted against 800lbs. at the station to supply the guaranteed pressure of 700lbs. There are three engines, but at present only one is working. Evidently Liverpool has not as yet fully recognised the value of this power.

MANCHESTER HYDRAULIC POWER.

The Manchester power when completed will consist of four overhead direct-acting triple expansion engines made by the Chester Hydraulic Company, the cylinders of each set being 15in., 22in., and 36in. diameter respectively, all 24in. stroke. These are coupled direct to three single-acting ram pumps 4¼in. diameter. The cranks are set at 120° (see Plates 6 & 7). Each set is guaranteed to deliver 230 gallons per minute against a pressure of 1,120lbs. per square inch. This will require a piston speed of about 240ft. per minute. Fly wheel 7ft. diameter and 2 tons weight. Each set supplied with surface condensers, fitted with tubes to give a cooling surface of about 530 square feet and each tube fitted with screwed gland packed with cotton. The condensers are so arranged that the water can circulate twice through the tubes. The air pump is about 15in. diameter, 16in. stroke, single-acting, cast iron, lined with gun-metal and fitted with rubber valves. Circulating pump 8in. diameter 16in. stroke, double-acting and delivering 310 gallons per

minute when the engines are running 240ft. per minute. The engines are so arranged that high pressure steam can be admitted to the intermediate cylinder, and under test to deliver in 10 hours 188,000 gallons at a pressure of 1,120lbs.

There are two Accumulators 18in. diameter 23ft. rise. The dead weight is carried in a circular cistern about 11ft. 3in. diameter filled with iron slag. The engines are at present coupled to three main delivery pipes 6in. diameter, and will finally have four. Air vessels are fitted on the suction pipes, one large on the main, and two smaller close to the pumps. Air is pumped into these occasionally by a small portable force pump. The accompanying pipe drawing shows the general pipe allotment to our principal thoroughfares. Up to the date of this plan there were 15,102 yards or over 8½ miles of piping, this including pipes of 6in., 5in., 4in. and 3in. diameter. The flanges are oval, the joint being a bevelled he and she joint, securing a ⅜in. gutta-percha ring by two bolts. These pipes are laid in sections, tested to 2,000lbs. per square inch, and so divided by stop valves that in the event of a breakage or bad joint, no greater length than 200 yards could be added by circuitous route to supply the surrounding mains.

All the Piping, general arrangement of which is shown in Plate 10, has been made by Messrs. Stewart and Messrs. Laidlaw, of Glasgow, and the only interest Manchester may be said to have had in their supply was the fact of their delivery by Canal. In laying the pipes the flanged joints were placed horizontally, and as in every case, the workmen scooped a hollow for the reception of the flanges to get readily to the bottom bolts—the joint is the weakest part of the pipe to carry weight. Had the flanges been placed vertically, the pipe joints would have been less likely to break, but the bottom bolts would certainly be more difficult to tighten.

The Stop Valve (Plate 8) and Momentum Valves (Plate 9) were supplied by Messrs. Storey, of this City, and they are placed on the main junctions of the supply pipes. As so large a valve under the pressure of 1,000lbs. would be difficult to move, they are balanced. Small Momentum Valves are also placed on each side of the Stop Valves. These Valves

are simply small rams 1¼in. dia. spring weighted, which in the event of any sudden shock in the flowing water, act as displacement or relief rams. A simple means is used for localizing a leak; a long rod held between the teeth and against the pipe indicates by its varying vibrations the exact position.

There are five boilers, made by Messrs. Yates & Thom., each 7ft. 6in. diameter, 30ft. long, two flues 3ft. diameter. and five Galloway tubes in each flue. The working pressure is 120lbs., and the test pressure is said to be 240lbs. They are fitted with Vicar's Mechanical Stokers.

METERS.

As the commercial success of the hydraulic power will greatly depend on the correct measurement of the supply, it was my intention to have brought before you a detailed description of the various meters in use; but finding this would extend the subject further than our usual limit, I must only, with your consent, give a *viva voce* explanation of some of the most efficient.

A perfect meter should register accurately against all pressures and velocities; small quantities as well as large quantities of water with equal correctness, be easy of access for repairs and difficult of access for those who want the water for nothing. The moving parts should be simple, interchangeable, and if reciprocating, balanced, not subject to undue wear from corrosion, the passages large to prevent throttling; and air passages should be avoided. With these requirements in view I leave it for you to judge how closely the meters illustrated approach to what is required. There is also another branch of the subject particularly interesting. I allude to water motors, but here again I regret that time will only permit me to allude to them.

COMPARISON OF WORKING COST.

In any comparison of cost we are met with considerable difficulties, not only to obtain the jealously guarded information from the users of machinery, but to obtain that information reliably. The comparisons rightly made should be between those firms pressing the same class of goods, shipping to the same markets, obtaining the same measurement, and each

working with different types of machinery. Such data is almost impossible. I am led, therefore, to make assumptions and approximations, somewhat fatal, it must be acknowledged, to very accurate results, but sufficiently near for a rough and general comparison.

It is proposed, therefore, that certain firms I have selected, and who have very kindly assisted me, should all do the same class of work. Take, for example, 10lbs. shirtings for the Indian market and to make bales of 50 pieces. Such goods would require in some cases a preliminary pressing in a 14in. press, technically called pressing off, and a finishing pressure in an 18in. press. Taking the actual number of bales per week, it is fair to assume that the hoists and bale lifts would be used in proportion to this number. We can now calculate the theoretic quantity of water that must be used in pressing and hoisting.

One firm using the old style of multiple pumps, with accumulator and a pair of engines constantly running, make on the average, 2,400 bales per week; the cost of coal, labour, and maintenance of the pumping power only being £20 per week or 2d. per bale. Supposing this plant to be substituted by the intensifier and town's pressure, and all hoists and bale lifts to be made hydraulic, it would cost if taken at 2s. per 1,000 gallons £30 per week for water only. But if the slack water was made use of it would cost £24 per week for water only. Taking advantage of the use of the slack water, reduces the cost, though I fear that under that system the out-put would be seriously affected.

Now taking a plant with direct acting engines (the most economical system) making 1,500 bales per week, the cost including coal, labour, and maintenance being £7 10s. per week or 1·18d. per bale. If altered to water power direct, it would cost £16 6s. for water only, or using the slack water £12 10s. per week for water only.

Taking again another firm working on the old system making 900 bales per week their cost is £9 0s. 0s. per week or 2·4d. per bale. Altered to water power the cost would be £11 6s. 0d., and if the slack were used £8 2s. 0d. per week for water only.

A firm making 1,150 bales per week on the old system their cost being about £14 15s. 0d. per week or 3d. per bale. Altered to water power would cost at the rate of 2s. per 1,000 gallons £15 15s. 0d. per week, and if the slack water were used £12 5s. per week for water only.

There are many small plants working with gas engines, say with one 18in. and one 14in. press, and making about 200 bales per week. One of the packers usually looks after the machinery, the cost of which including gas, labour, and maintenance does not exceed 40s. per week. In comparison with the water power direct if taken at 2s. 10d. per 1,000 gallons, the cost would be 73s., and if the slack water were used 56s. per week for water only.

In the comparisons above no account is taken of interest, depreciation, rent, or insurance, all of which are greatly in favour of the hydraulic power; and where an extensive plant of new machinery is proposed, these questions may be of vital importance.

For the convenience of the members, an appendix is added containing the quarterly scale of charges for the hydraulic power supplied by meter. These charges are nearly identical with those of London. One of the rules accompanying the scale of charges is rather objectionable, viz.: "As the pressure will vary to some extent, in different localities, makers of machinery should ascertain from the engineer of the Corporation, what pressure will be given in the particular district before constructing their machinery." Objectionable, because it implies a doubt that a fairly uniform pressure can be maintained, but while the engines at the installation maintain the 1,120lbs. pressure, delivering within their maximum of supply, there should be no great variation. The four sets of engines, when completed, will deliver through four 6in. mains, and when each engine is delivering 230 gallons per minute, or 920 gallons in all, the velocity due to this delivery through these mains will be 3·36ft. per second. Taking the distance from the installation to the bottom of Market Street as being 2,000 yards, the loss of pressure there due to this velocity will be about 52lbs. and allowing for bends and elbows, say 100lbs., to meet

879714A

which the guaranteed 1,000lbs. is increased to 1,120lbs. at the installation.

CAPACITY TO MEET REQUIREMENTS.

It has never been suggested that the present capacity at the installation would meet all the requirements of Manchester; indeed, Portland Street alone, with its 64 hydraulic presses and 50 hoists and lifts, if all made hydraulic, would swallow up one-third of the present supply.

CONCLUSION.

The success of the hydraulic power in its application to hoists, cranes, lifts, &c., and the facility it offers for power to small industries, cannot for one moment be questioned. Its success in London is sufficient proof of how much it is appreciated; but whether its success will be as marked in its application to larger industries such as our extensive warehouse plants remains yet to be seen. It is not a question of supply only, because that can readily be met by other installations; it is also a question of cost, and that should be met by a public company, who should look to the advantage of the community rather than big profits.

Assuming the success of the 1,000lbs. pressure to warehouse plants, I do not see why it should not be followed by a second line of piping carrying 2½ tons per square inch.

There are some mechanical difficulties no doubt, but they may be overcome. We have no extra friction to contend with, for that is independent of pressure. The strength of the pipes, the material to resist corrosion, and their joints, would be the problems.

The 100 Warehouse Engineers and their assistants in Manchester are looking with some dread upon the introduction of this Hydraulic Power, fearing on its general acceptance to be reduced to the labour list, but so great a change will take time, and new and unexpected channels will open, offering better opportunities for the skilled artizan. The Hydraulic Motor is yet in its infancy, the Turbine, in its application to Dynamos for domestic uses, wants further developments, and may receive an impetus from the command of a power so simple and so effective as the hydraulic.

APPENDIX.

Manchester Corporation Waterworks.

HYDRAULIC POWER SUPPLY.

Conditions of Supply and Regulations for the Guidance of Makers of Hydraulic Apparatus for connection to the Pressure Mains of the Corporation.

These Regulations must be complied with prior to the Water being Supplied.

By the Manchester Corporation Act, 1891, it is provided that the power conferred upon the Corporation by their Waterworks Acts to supply any person with water for other than domestic purposes at such rent and upon such terms and conditions as shall be agreed upon between the Corporation and the person desirous of having such supply of water, shall extend to the Supply by the Corporation within the City by Agreement of Water under Pressure for the purpose of Supplying Motive Power by Hydraulic Pressure for any Purposes to which such Power is applicable, and such supply is deemed a purpose of the Waterworks Acts and a part of the Waterworks Undertaking of the Corporation. Such supply is accordingly subject to the ordinary powers, remedies, penalties, and regulations applicable to the Waterworks of the Corporation.

1. The Corporation will execute at their own expense all works necessary to connect supply pipes from their mains to the point of entry to the consumer's premises.

2. Where the power is required at some distance from the existing mains, special arrangements, involving an additional but temporary rental, are made for its supply, but the Corporation will lay special mains, without extra charge, where the use of the power is guaranteed of sufficient amount.

3. The quantity of water before or after use as may be decided by the Corporation must be measured through a meter, and the Corporation will, at the cost of the consumer, provide and maintain one or more meters with tanks on the consumer's premises for registering the power water supplied, and connect the same to the consumer's pipes, the Corporation reserving the right to examine, at all reasonable times, such meter or meters

for the purpose of keeping the same in repair or recording the power consumed.

4. The consumer will pay the Corporation for power taken in accordance with the scale of charges hereto annexed, a minimum charge being fixed at the rate of 4,000 gallons per quarter for each machine on the consumer's premises.

5. The meter rent is approximately 5s. per quarter per machine, including maintenance of meter.

6. In the event of the meter or meters failing to register the consumption of power in any one quarter, the amount of power charged for shall be calculated on the average daily consumption during the period in the quarter in which the meter or meters were properly recording.

7. Every consumer is considered as bound one year, and subject to three months' notice in writing, terminating with any quarter after the expiration of the first year.

8. The Corporation will, unless prevented by unforeseen accident, supply pressure water in their mains charged to not less than 1,000 lbs. to the square inch at the Corporation's accumulators.

9. Any necessary repairs to the works or mains of the Corporation involving a cessation of the supply of power shall, if practicable, be executed at night, or, if necessary, continuously by day and night, and, where possible, due notice of any such cessation shall be given to the consumer.

10. Every machine, before being connected to the service pipe, is to be examined by the Inspecting Officer of the Corporation, and notice is to be given by the consumer to the Corporation of intention to connect additional machines beyond the number first agreed for.

11. All machinery must be constructed, worked, and maintained in accordance with the regulations of the Corporation.

12. All cylinders, rams, pipes, valves, or other apparatus subjected to the pressure from the mains shall be tested to 3,000 lbs. per square inch, and be certified either by the maker or by the Corporation.

13. All hydraulic machinery having rams working in cylinders shall be provided with permanent stops by which the rams will

be prevented from being forced out of the cylinders, quite independent of any valve or tappet gear.

14. Back pressure non-return valves, or other approved similar apparatus, shall be fitted to all service pipes as near as possible to the inlet to the building.

15. An independent screw-down stop cock shall be fitted immediately inside the building, in addition to the stop cock fitted by the Corporation on the service pipe in the street.

16. A relief valve, loaded to 1,200 lbs. on the square inch, shall be fixed on all service pipes exceeding one inch internal diameter, as near as possible to the main stop cock inside the building. The escape pipe from this relief valve must be connected to the general system of return water pipes.

17. Hydraulic cylinders, valves, and pipes are to be so arranged and fitted with air and drain cocks that they can be efficiently drained and washed out. Means must be provided for preventing water syphoning out of the cylinders.

18. All pipes and cylinders laid above ground, and in positions where they may be exposed, are to be encased with non-conducting material, or protected by some other means, such as the use of gas flames, against damage by frost. Efficient means must also be provided for lubricating all working parts.

19. All machines fixed in the same building where the water is measured on the exhaust pipe, are to pass the water after use into one system of return mains, so that one meter will suffice for measurement. The return main must be laid in such a manner as will allow of the meters being fixed as may be required by the Corporation.

20. The consumer's pipes must in all cases be brought up to the meters in such a position as may be directed by the Corporation.

21. The pressure water will be turned on after the test by the Inspecting Officer of the Corporation of the machinery and pipes, and after an inspection of the same according to the foregoing regulations. Should all be found in order and no leakage apparent, the supply will be continued from that time, according

to the agreement entered into. The stop cock on the consumer's premises should be screwed down after working hours every day, and also on Sundays and holidays.

22. The service pipe will be laid of sufficient size to give the supply that may be required, and the makers of machinery must so proportion the pipes and valves on the consumer's premises as to convey the pressure to the machines without undue loss. As the pressure will vary to some extent in different localities, makers of machinery should ascertain from the Engineer of the Corporation what pressure will be given in the particular district before constructing their machinery.

23. The Corporation will not be responsible for any damage or accident that may arise either from interruption of supply or from any matter connected with the machinery, pipes, or other apparatus fixed upon the consumer's premises.

24. The Corporation reserve the right, after due notice, of separating from the main forthwith, and without previous notice, the service pipe of any consumer failing to make the payments falling due, or refusing or failing to comply with any of the preceding terms or conditions to their satisfaction.

25. In case of accident or complaint information to be given at the Hydraulic Pumping Station, Gloucester Street, or at the Waterworks Office, Town Hall (Cooper Street entrance), Manchester.

By order of the Waterworks Committee,

WM. HENRY TALBOT,

TOWN CLERK.

Town Hall, Manchester,
October, 1893.

QUARTERLY SCALE OF CHARGES FOR HYDRAULIC POWER SUPPLIED BY METER.

This Scale is subject to revision at the expiration of 5 years from January, 1894, and at the expiration of each subsequent period of 3 years.

Quantity of Power-Water in Gallons.	Amount of Charge.			Quantity of Power-Water in Gallons.	Amount of Charge.			Quantity of Power-Water in Gallons.	Amount of Charge.		
	£	s.	d.		£	s.	d.		£	s.	d.
4,000 or under	2	0	0	51,000	12	13	0	98,000	19	14	0
5,000	2	5	0	52,000	12	16	0	99,000	19	17	0
6,000	2	10	0	53,000	12	19	0	100,000	20	0	0
7,000	2	15	0	54,000	13	2	0	101,000	20	2	3
8,000	3	0	0	55,000	13	5	0	102,000	20	4	6
9,000	3	5	0	56,000	13	8	0	103,000	20	6	9
10,000	3	10	0	57,000	13	11	0	104,000	20	9	0
11,000	3	15	0	58,000	13	14	0	105,000	20	11	3
12,000	4	0	0	59,000	13	17	0	106,000	20	13	6
13,000	4	5	0	60,000	14	0	0	107,000	20	15	9
14,000	4	10	0	61,000	14	3	0	108,000	20	18	0
15,000	4	15	0	62,000	14	6	0	109,000	21	0	3
16,000	5	0	0	63,000	14	9	0	110,000	21	2	6
17,000	5	5	0	64,000	14	12	0	111,000	21	4	9
18,000	5	10	0	65,000	14	15	0	112,000	21	7	0
19,000	5	15	0	66,000	14	18	0	113,000	21	9	3
20,000	6	0	0	67,000	15	1	0	114,000	21	11	6
21,000	6	5	0	68,000	15	4	0	115,000	21	13	9
22,000	6	10	0	69,000	15	7	0	116,000	21	16	0
23,000	6	15	0	70,000	15	10	0	117,000	21	18	3
24,000	7	0	0	71,000	15	13	0	118,000	22	0	6
25,000	7	5	0	72,000	15	16	0	119,000	22	2	9
26,000	7	10	0	73,000	15	19	0	120,000	22	5	0
27,000	7	15	0	74,000	16	2	0	121,000	22	7	3
28,000	8	0	0	75,000	16	5	0	122,000	22	9	6
29,000	8	5	0	76,000	16	8	0	123,000	22	11	9
30,000	8	10	0	77,000	16	11	0	124,000	22	14	0
31,000	8	14	0	78,000	16	14	0	125,000	22	16	3
32,000	8	18	0	79,000	16	17	0	126,000	22	18	6
33,000	9	2	0	80,000	17	0	0	127,000	23	0	9
34,000	9	6	0	81,000	17	3	0	128,000	23	3	0
35,000	9	10	0	82,000	17	6	0	129,000	23	5	3
36,000	9	14	0	83,000	17	9	0	130,000	23	7	6
37,000	9	18	0	84,000	17	12	0	131,000	23	9	9
38,000	10	2	0	85,000	17	15	0	132,000	23	12	0
39,000	10	6	0	86,000	17	18	0	133,000	23	14	3
40,000	10	10	0	87,000	18	1	0	134,000	23	16	6
41,000	10	14	0	88,000	18	4	0	135,000	23	18	9
42,000	10	18	0	89,000	18	7	0	136,000	24	1	0
43,000	11	2	0	90,000	18	10	0	137,000	24	3	3
44,000	11	6	0	91,000	18	13	0	138,000	24	5	6
45,000	11	10	0	92,000	18	16	0	139,000	24	7	9
46,000	11	14	0	93,000	18	19	0	140,000	24	10	0
47,000	11	18	0	94,000	19	2	0	141,000	24	12	3
48,000	12	2	0	95,000	19	5	0	142,000	24	14	6
49,000	12	6	0	96,000	19	8	0	143,000	24	16	9
50,000	12	10	0	97,000	19	11	0	144,000	24	19	0

Quantity of Power-Water in Gallons.	Amount of Charge.			Quantity of Power-Water in Gallons.	Amount of Charge.			Quantity of Power-Water in Gallons.	Amount of Charge.		
	£	s.	d.		£	s.	d.		£	s.	d.
145,000	25	1	3	197,000	30	18	3	249,000	36	15	3
146,000	25	3	6	198,000	31	0	6	250,000	36	17	6
147,000	25	5	9	199,000	31	2	9	251,000	36	19	9
148,000	25	8	0	200,000	31	5	0	252,000	37	2	0
149,000	25	10	3	201,000	31	7	3	253,000	37	4	3
150,000	25	12	6	202,000	31	9	6	254,000	37	6	6
151,000	25	14	9	203,000	31	11	9	255,000	37	8	9
152,000	25	17	0	204,000	31	14	0	256,000	37	11	0
153,000	25	19	3	205,000	31	16	3	257,000	37	13	3
154,000	26	1	6	206,000	31	18	6	258,000	37	15	6
155,000	26	3	9	207,000	32	0	9	259,000	37	17	9
156,000	26	6	0	208,000	32	3	0	260,000	38	0	0
157,000	26	8	3	209,000	32	5	3	261,000	38	2	3
158,000	26	10	6	210,000	32	7	6	262,000	38	4	6
159,000	26	12	9	211,000	32	9	9	263,000	38	6	9
160,000	26	15	0	212,000	32	12	0	264,000	38	9	0
161,000	26	17	3	213,000	32	14	3	265,000	38	11	3
162,000	26	19	6	214,000	32	16	6	266,000	38	13	6
163,000	27	1	9	215,000	32	18	9	267,000	38	15	9
164,000	27	4	0	216,000	33	1	0	268,000	38	18	0
165,000	27	6	3	217,000	33	3	3	269,000	39	0	3
166,000	27	8	6	218,000	33	5	6	270,000	39	2	6
167,000	27	10	9	219,000	33	7	9	271,000	39	4	9
168,000	27	13	0	220,000	33	10	0	272,000	39	7	0
169,000	27	15	3	221,000	33	12	3	273,000	39	9	3
170,000	27	17	6	222,000	33	14	6	274,000	39	11	6
171,000	27	19	9	223,000	33	16	9	275,000	39	13	9
172,000	28	2	0	224,000	33	19	0	276,000	39	16	0
173,000	28	4	3	225,000	34	1	3	277,000	39	18	3
174,000	28	6	6	226,000	34	3	6	278,000	40	0	6
175,000	28	8	9	227,000	34	5	9	279,000	40	2	9
176,000	28	11	0	228,000	34	8	0	280,000	40	5	0
177,000	28	13	3	229,000	34	10	3	281,000	40	7	3
178,000	28	15	6	230,000	34	12	6	282,000	40	9	6
179,000	28	17	9	231,000	34	14	9	283,000	40	11	9
180,000	29	0	0	232,000	34	17	0	284,000	40	14	0
181,000	29	2	3	233,000	34	19	3	285,000	40	16	3
182,000	29	4	6	234,000	35	1	6	286,000	40	18	6
183,000	29	6	9	235,000	35	3	9	287,000	41	0	9
184,000	29	9	0	236,000	35	6	0	288,000	41	3	0
185,000	29	11	3	237,000	35	8	3	289,000	41	5	3
186,000	29	13	6	238,000	35	10	6	290,000	41	7	6
187,000	29	15	9	239,000	35	12	9	291,000	41	9	9
188,000	29	18	0	240,000	35	15	0	292,000	41	12	0
189,000	30	0	3	241,000	35	17	3	293,000	41	14	3
190,000	30	2	6	242,000	35	19	6	294,000	41	16	6
191,000	30	4	9	243,000	36	1	9	295,000	41	18	9
192,000	30	7	0	244,000	36	4	0	296,000	42	1	0
193,000	30	9	3	245,000	36	6	3	297,000	42	3	3
194 000	30	11	6	246,000	36	8	6	298,000	42	5	6
195,000	30	13	9	247,000	36	10	9	299,000	42	7	9
196,000	30	16	0	248,000	36	13	0	300,000	42	10	0

Over 300,000 Gallons by Special Terms.

DISCUSSION.

The PRESIDENT (Mr. T. Daniels) expressed the opinion that it was difficult to say where municipal and private enterprise should be divided in these hydraulic centres, but trusted that some of the gentlemen present would favour them with their views regarding it.

Mr. T. CANNELL said he had known the author about 25 years, and therefore anything he might say, he trusted, would not be taken as evincing a hostile spirit, but merely as friendly criticism. The author had placed before them as a model the direct-acting plant constructed by Messrs. Nasmyth, Wilson & Co. Limited, now working at Messrs. Barbour Bros. Recently, in regard to this plant he had been making certain calculations, and he put the consumption of coal at 260 tons per year, and at 10/- per ton would amount to £130. The engineer and stokers' salaries, (a low estimate) at £120, and the packing, hydraulic leather's bill and repairing, &c., £100. The plant would probably cost about £3,300, that was including the accumulator, boiler and engines complete. After allowing for interest and depreciation, say at 10 per cent. the total cost of that plant would be £680 per year; or for their turn-over something like 2d. per bale. As regards the much despised Worthington or "coal-eater" they had one in the town, made by a Birmingham firm, and altered by a good Manchester firm. It worked presses of the largest size, 18in., and turned out about a 1000 bales per week. In this case he put the cost of coal down at £180; engineer, £80; oil, etc., £40; interest and depreciation, £140; total £440, or about £9 per week. On their turn-over it would amount to 2d. per bale. That was a comparison not so much from an engineering point of view, but as a commercial investment. He might mention that the firm with whom he was employed made the first accumulator in Manchester for Manchester work. To that fact he could testify because it was arranged, designed and fixed under his supervision, and it was not till some years after that the hydraulic accumulator was used for packing goods.

He could not agree with the author when he stated in the opening paragraph on pumping engines (page 87) that "It is evident that in the compressing of any material, the pressure will vary as the density; and that at the preliminary stages a large quantity of water will be required at a low pressure, and at the final stages a small quantity at a high pressure. This curve of pressures will vary with every material pressed—the harder material requiring less low pressure and more high pressure than material of a softer texture." Now as a matter of fact the reverse was the case, the harder the goods and the less of a dense pressure was required, and the softer the goods the greater density of pressure was necessary. In proof of this assertion he had in his hands a paper written by Mr. Charles Hopkinson on Hydraulic Packing Presses, in which were two diagrams, the one showing hard goods and the other soft goods. This diagram indicated that to finish the hard goods not more than 6in. of pressure was needed, while the softer goods required 10in. each after accumulation. The diagram was taken from a 18in. hydraulic press.

To again refer to the plant of Barbour Bros., it was so arranged that when it was at its ultimate pressure it could put about 2¼ tons per square inch. Let them assume, however, that the stoker through incompetency, bad coal, or any other cause, let the steam run down to 40lbs. and some shirting bales were immediately required for India; they could not then be pressed until the boiler pressure had been got to its normal height, and yet that was a plant which the author recommended.

He might say that John Shaw & Sons had direct acting plants in Manchester, where six strokes of the engine would finish an Indian bale after accumulation in the 18in. press.

Practically speaking, in his opinion, there were no good points in the direct acting plant so strongly recommended by the author of the paper this evening.

Mr. John Donaldson (Engineer to Messrs. Barbour Bros.), at the request of the Chairman, took part in the discussion. He said, with regard to the remarks of Mr. Cannell that the Barbour plant was unreliable and expensive to maintain, owing to the many breakdowns, he disagreed entirely with these state-

ments. As the engineer, he had carefully looked into the expenditure, and he found that during the eight and a half years the plant had been in operation only £24. 5s. had been spent in repairs. That fact amply demonstrated that the maker had turned out a first class and reliable plant. He might further add that he had had charge of plants constructed by the same firm for the past 15 years, and certainly never once had a single bale been short shipped through any fault of the engines or pumps. The engines which worked their accumulator had never had a single penny expended upon them. It might be asked how it was that they were able to turn out their bales at a less cost per bale than any other house in Manchester who used an accumulator. It was probably due to the fact that they had one set of engines for working accumulators only, and a second set for finishing off the bale in the press, each set working independently of each other. Other makers of direct-acting pumping engines combined the high and low pressure pumps on the same engine, all the rams being utilised for pumping into the accumulator. In such a plant the following action often took place: Assuming that a bale was being set and they had got as far as possible with the accumulator, they opened the high pressure tap and the press would not move. The reason of this was that the accumulator had gone to the extent of its lift and shut the steam off. Then occurred a waste of water, and they had either to run an empty press up, or lower the bale they had been trying to set to run the accumulator down. The accumulator tap had to be opened and the water so run back into the supply cistern through the lowering tap of the press. After a considerable quantity of water had been wasted and the engines started, the bale could be finished off with high pressure water. In a pumping plant, where the high and low pressure pumps were worked by the same engines, there were usually four low pressure and four high pressure pumps (the latest design). When that class of engine was pumping the 10in. of set required to finish the bale after the accumulator had finished, the four high pressure pumps could only pump water to the press by an arrangement of stops at the press. When the high pressure tap was opened to send high pressure to the press, the accumulator tap was opened with the supply

cistern, the safety valve being nearly always blowing. In the Barbour plant a waste like this could not occur, nor would the valuable time be lost. Similar objections held good regarding the intensifiers, since to run an 18in. press up 10in., the 21in. ram of the intensifiers had to move up 44in. This 44in. of water in a 21in. ram had to be run to waste every time a press was set. With 8¼lbs. or 10lbs. India shirtings, it amounted to 53 gallons per bale, and with five 18in. presses on shirtings, turning out five bales per week, the five presses would require 236 gallons of high pressure water, and the intensifier 1,325 gallons at 1,000lbs. per square inch. With direct-acting pumps 236 gallons would only be required to be pumped.

Mr. W. J. Jenkins thought that the author had very simply and effectively placed the subject before the meeting.

He was of opinion however that the remark that the the invention of the Intensifier in 1886 rendered possible the construction of central hydraulic plant, must be an error, because the London plant was designed and operating, and a paper read on the subject in 1887 before the Institution of Civil Engineers by Mr. E. B. Ellington. In a recent paper communicated to the Civil Engineers,* Mr. Ellington pointed out the effect of what was commonly known as the "load factor" on the economy of the plant. It might be mentioned in parenthesis that "load factor" was a term invented by electricians to account for the fact that although about 4lbs. of coal should be sufficient to produce one unit of electricity, it generally took from 18 to 20lbs per unit. Such a divergence between theory and practice arose from the fact that in order to meet the maximum demand during the day a large number of boilers were necessary. As the electric plant only worked 4 hours and then stood for 20 hours, the load factor came out at about 25 %. That was to say, if the whole of the plant working at its maximum capacity for the whole of the year were termed 100, the actual work was only 25. The consequences were that it cost four or five times more to work the plant than if it were always working at its full capacity. The load factor of the Hydraulic Co. in London was about 32 %, and it was a singular fact that

* Minutes of Proceedings, Institution of Civil Engineers.—Vol. CXV.

the maximum hourly amount of high pressure water used in London, and the maximum hourly amount of electricity delivered nearly corresponded. The hydraulic curve reached the maximum at 11 o'clock in the morning, and began to fall about 5 in the afternoon, and of course the amount in the night was not above 10% of the maximum. The maximum electric curve corresponded with that almost exactly, and it was singular to note that the maximum demand was not about six or eight at night but at twelve o'clock in the day, owing to fogs and similar things, therefore it was not possible to increase the load factor of the hydraulic supply station by using the same engines for pumping during the day, and for producing electricity at night.

Mr. Ellington pointed out that he did not think it possible to improve the load factor of the London Hydraulic scheme, because he did not anticipate any advantage accruing from storage, as the accumulators would only hold about 1½ minutes' pumping supply.

Another interesting point mentioned by Mr. Ellington was that only 60% of the coal was used continuously in pumping water. Of the remainder 20% was lost through intermittent working of the pumps, 12% from radiation and keeping up steam during night, and the final 8% was absorbed for subsidiary purposes. Such figures as these were extremely valuable in his (Mr. Jenkins's) opinion, since they demonstrated the tremendous loss which accrued from intermittent working. Again, Mr. Ellington tested the triple engines referred to by Mr. Lewis, and he found that on the test they were pumping water for 1·3lbs. of coal per indicated HP per hour, but the actual amount, taking the average of the whole production of last year, came out at 4·6lbs. of coal per indicated HP per hour.

It might not be inappropriate to mention that there were 67 miles of hydraulic piping in London, and the cost up to the present time amounted to £420,000.

It would perhaps be within the memory of the members present, that recently he had had the honour of communicating to the Association a paper on the Transmission of Power by Compressed Air.* He merely referred to it to emphasize the fact that any hydraulic transmission of force was not transmission

* Transactions, 1893.

of power in the ordinary acceptation of the term, for the reason that on account of its great cost it could not be used for power purposes except for pressing, lifting, and other essentially intermittent work.

Assume, for instance, that a man desired to run an engine of 10 indicated HP for some purpose and that it is decided to adopt the hydraulic system. The pressure in the mains being 1,000lbs. per square inch, 1·5 gallons per minute would theoretically give 1 indicated HP. That meant using 620,000 gallons per quarter. The lowest price given on the Corporation sheet was 2/6 per thousand gallons. Even assuming, however, that the user obtained the water at 2/- per gallon, because of the large quantity consumed, the cost would amount to £240 per annum for 10 indicated HP working 10 hours per day.

Again if the Pelton motor, which was said to be the most perfect means for the conversion of hydraulic power into rotary motion, were adopted, the efficiency of which was 70 per cent, the cost of 10 HP for twelve months would be £350. Let them compare these figures with those for the compressed air system which was so unfortunate in Birmingham. He might say that he had some friends in the latter town who were using the compressed air. The usual price was 4d. per thousand cubic feet, but his friends used large quantities and 10 HP for twelve months cost £69; that was for air only. No attention was required. Subsequently when the Birmingham scheme collapsed they were compelled to put in an engine and boiler. The result was that whereas before they had only been paying £69 per annum, the boiler and the attendant required for that boiler cost £115, so that there was something to be said in favour of compressed air. The Birmingham compressed air, to ordinary users, cost 4d. per 1,000 cubic feet, but as a matter of fact it could be sold at a profit for 2d. per 1,000 cubic feet. Another advantage which compressed air possessed over hydraulic power, was that if with the latter the power was reduced, no corresponding saving occured. With air however, although an exactly corresponding advantage did not ensue, yet about half the difference was saved. Of course a good many people still clung to the old idea that compressed air was very expensive. He thought that might be accounted for by the fact that compressed air had been

tested more accurately than hydraulic power. The former preceded the latter and it was found to be uneconomical, due to bad construction of the pumps and other defects. Then hydraulic power came to the front, and while it answered admirably for lifts yet it was found no better than compressed air for ordinary power purposes. Then people came to the conclusion that having thrown out their air compressors they must make the best of the hydraulic plant for there was nothing else to try. Certainly he did not see why they should compare the air compressors of twenty years ago with the hydraulic pumps of to-day, such as the splendid triple expansion engine shown by Mr. Lewis's drawing any more than they would dream of drawing a comparison with the pumps of years past and those of the present time. In reference to this an interesting comparison could be obtained from a paper recently communicated to the Institution of Mechanical Engineers "On the working of Steam Pumps."* In this paper it was shown that the best compound Worthington pump, pumping water for station use on the Russian railways was 2¼ times less efficient than an ordinary Cornish pumping engine for water works. That was to say, the compound Worthington pump working intermittently took at its best 2¼ times the steam that a Cornish pumping engine, working against a steady load in a water would require works. The average pump taking high pressure and compound altogether, was 5·6 times less efficient than the Cornish pump, and steam to the amount of 83lbs. per indicated HP had frequently been used with ordinary pumping engines pumping water.

The gentlemen who spoke about the plant working without an accumulator for packing houses, might give some valuable information on the subject of the condensation and loss due to the stopping and starting of the hydraulic engines; it was evident that a great loss of steam in these pumps was due to the stopping and starting. The author might perhaps tell them whether the direct-acting pumping engine would use much more steam for the amount of water delivered than the same pump running continously. He would like the author also to say what was done with the water from the Corporation mains, would it be run away directly or used over again?

* Proceedings, Institution of Mechanical Engineers, 1893. Page 433.

In conclusion he had great pleasure in expressing his appreciation of Mr. Lewis's paper, and its great interest must be his excuse for his, perhaps, somewhat lengthy remarks.

Mr. JOHN WEST (Past President) expressed the opinon that the transmission of power by compressed air was more simple and effective than by hydraulic means. It was not right to assume that because the Birmingham scheme failed, and failed obviously on account of defective engineering and other faults, that compressed air was done with, because he was firmly of opinion that as a motive power it had a very important future.

Mr. HENRY WEBB, in a few appreciative words, proposed a vote of thanks to the author for his interesting paper.

Mr. THOMAS ASHBURY had great pleasure in seconding the proposition, and remarked that, perhaps, it would hardly be desirable that a paper should be read to them without the possibility of amendment or criticsm. The author, however, could readily defend himself on the question of compressed air versus hydraulic power. He should like to ask what became of the waste water? In this respect compressed air seemed to have a great advantage, as when it had done its work it went back to the place from where it came; the supply was constant and it did not cost as much as water.

The vote of thanks was carried with acclamation.

Mr. GILBERT LEWIS in reply to various remarks said, he regretted he was not at liberty to directly refer to the particular firms to whom he was indebted for his various particulars, re costs of working, etc., otherwise he could have more effectively refuted the figures stated by Mr. Cannell; he might mention, however, that Mr. Cannell in his remarks included interest and depreciation which he (the Author) very carefully avoided.

With respect to Mr. Cannell's remarks in regard to Messrs. Barbour's plant, the proof of its efficiency was indicated by the results.

As originally their old plant had been on the old system and subsequently had been replaced by one on "the direct-acting

principle," with considerable advantage to themselves in their annual coal bill, he thought the merit or otherwise of the latter plant was sufficiently demonstrated. Whether the increased economy in the coal consumption was due to the fact of having a superior engineer carefully guarding against losses in working, or on the other hand to the increased efficiency of the plant, was a question which he left to the judgment of his audience.

Personally, however, he thought the good results were due to both, and certainly in his own mind he was convinced that the "direct-acting system" was infinitely superior to the old "churning action" of the several sets of pumps.

As regards Mr. Cannell's remark that the direct-acting engine was only limited to a certain pressure, of course that only assumed that the stoker in charge of the boilers never watched the pressure; further, Mr. Cannell seemed to be under the impression that he (the author) recommend the particular plant referred to, but he ventured to think that no one after reading his paper would really be able to say as to which system the writer of the paper was in favour of. At the same time, he now maintained that the Barbour plant was most economical, but for all that it did not necessarily follow that he would recommend it under all conditions.

He quite agreed with Mr. Jenkins in his complimentary remarks respecting Mr. Ellington, because undoubtedly he was a great authority on hydraulics, and always impartially stated the various points of his subject.

With respect to Mr. Jenkins' assertion that hydraulic power was not capable of being used as a rotary power, it should be remembered that for this purpose they had engines some of which Mr. Jenkins must have seen. For instance, they had the Hastie engine and also Riggs engine, both of which accommodated themselves to the power required.

He was glad to hear Mr. Jenkins remarks on compressed air and no doubt its application to rotary engines would be advantageous, but he did not think it was suitable for warehouse presses or engines. Unfortunately in the application of compressed air they had the failure of the Birmingham scheme before them, though why it failed it would be difficult definitely

to say; probably the real truth, however, laid in the fact of the almost mechanical impossibility of getting the pipes and joints to retain their pressure in any given length. Certainly they had had success in small plants, but it did seem that when they came to erect large installations mechanical difficulties and conditions resulted which apparently seemed insuperable.

Reference had been made to the question of the waste water. In reference to this point he might say that in getting out the costs of the working he asked one of the engineers of the hydraulic installation what they were going to pay for the Thirlmere water, and he replied that they should not charge anything for it, but they ought, however, to know what they were going to be debited with.

The London Hydraulic Power Co. used the Thames water, but of course with it they had the expense of filtration.

HYDRAULIC POWER.

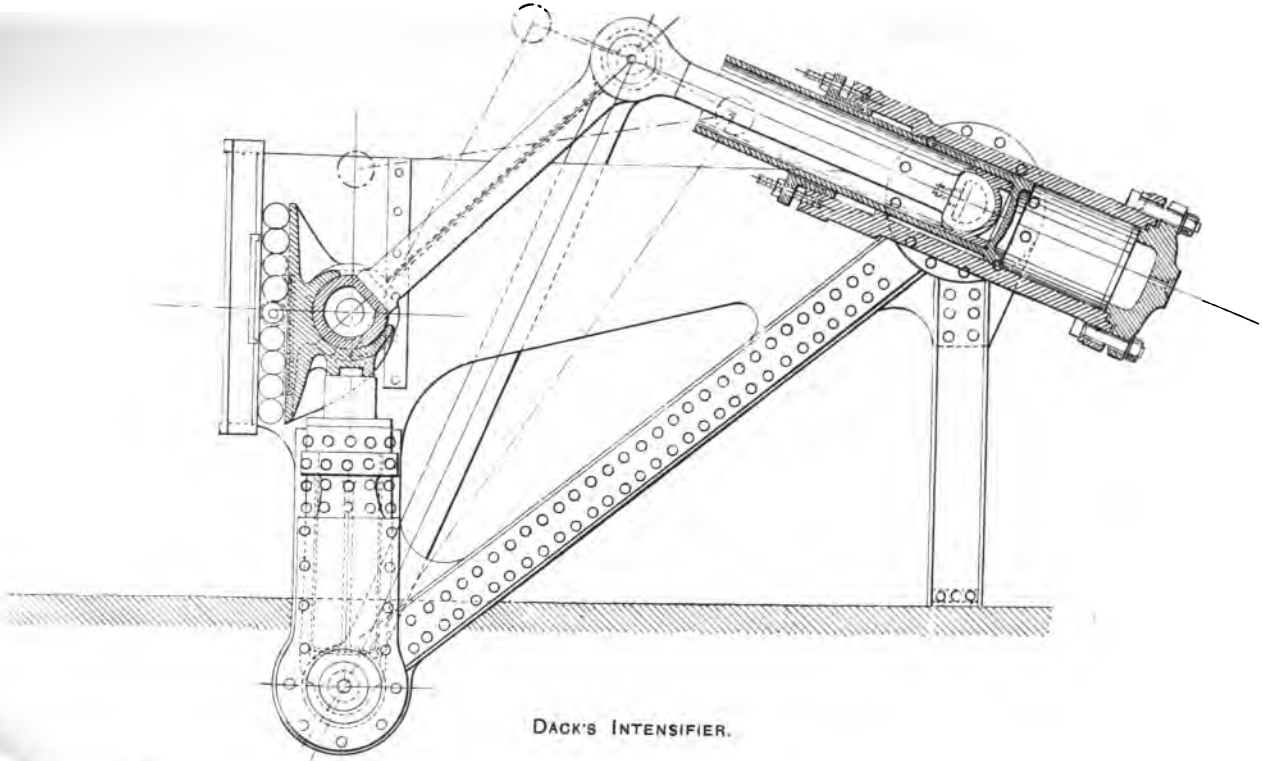

DACK'S INTENSIFIER.

CIATION OF ENGINEERS

YORK
RY
AND
FOUNDATIONS

HYDRAULIC POWER.

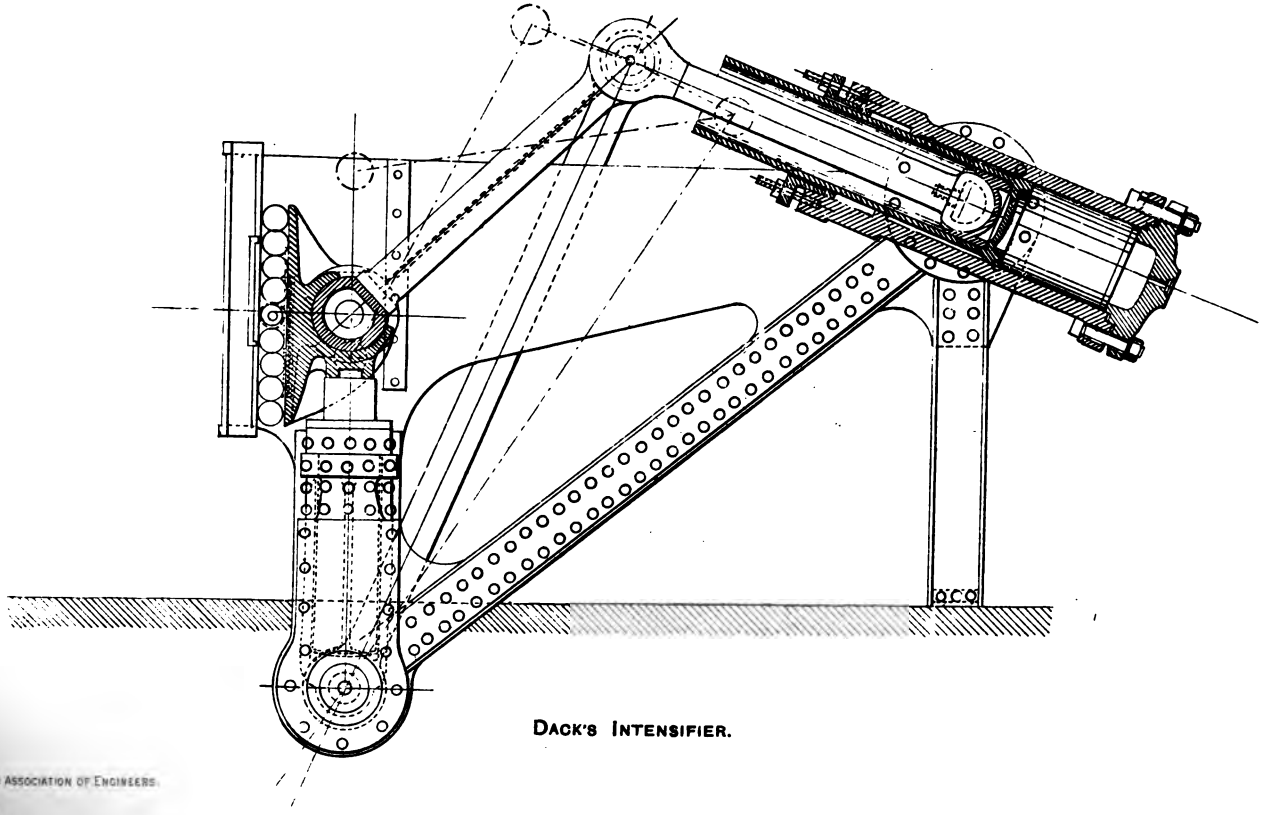

DACK'S INTENSIFIER.

STER ASSOCIATION OF ENGINEERS.

FW YORK
AND
UNDATIONS
R L

HYDRAULIC POWER.

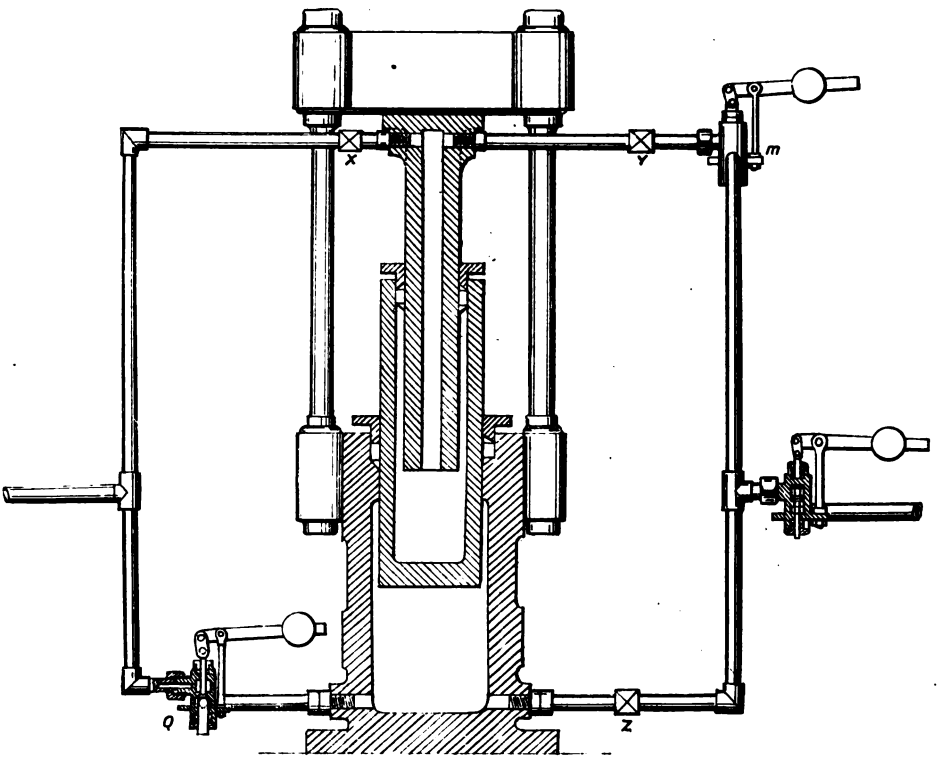

BELLHOUSE HYDRAULIC INTENSIFIER.

YORK
RY
ND
TILDEN FOUNDATIONS
R L

HYDRAULIC POWER.

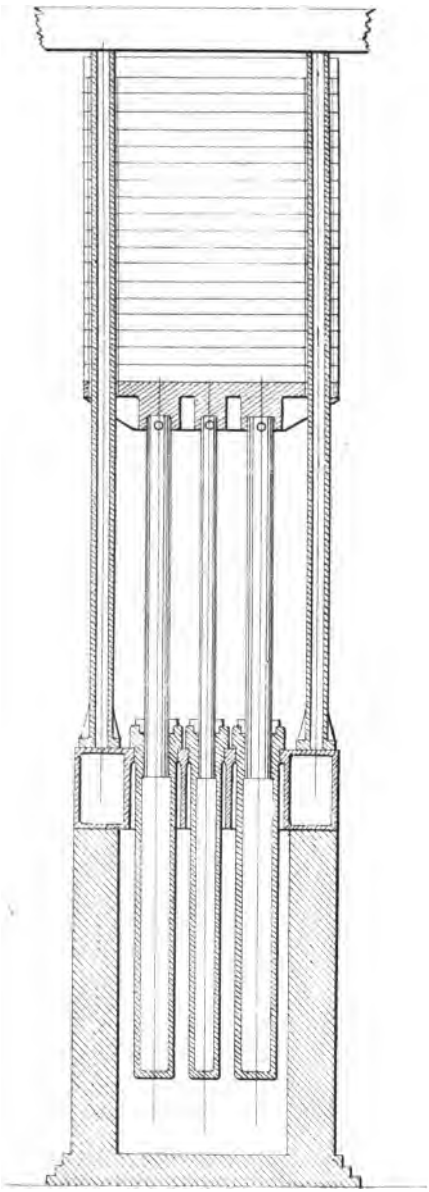

DIFFERENTIAL ACCUMULATOR.

THE NEW YORK
PUBLIC LIBRARY

ASTOR, LENOX AND
TILDEN FOUNDATIONS
R L

HYDRAULIC POWER.

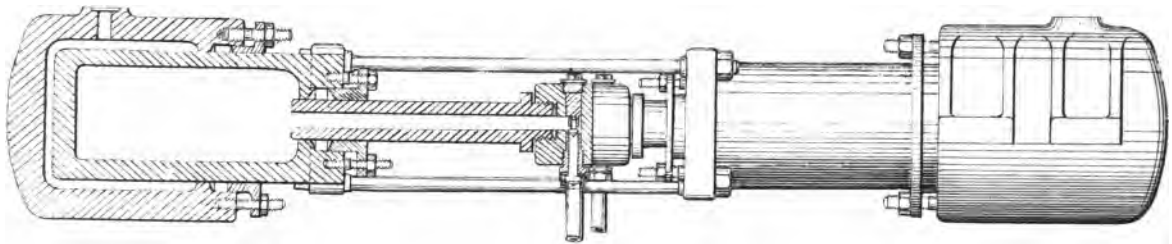

DOUBLE-ACTING INTENSIFIER

THE NEW YORK
PUBLIC LIBRARY

ASTOR, LENOX AND
TILDEN FOUNDATIONS
R L

HYDRAULIC POWER.

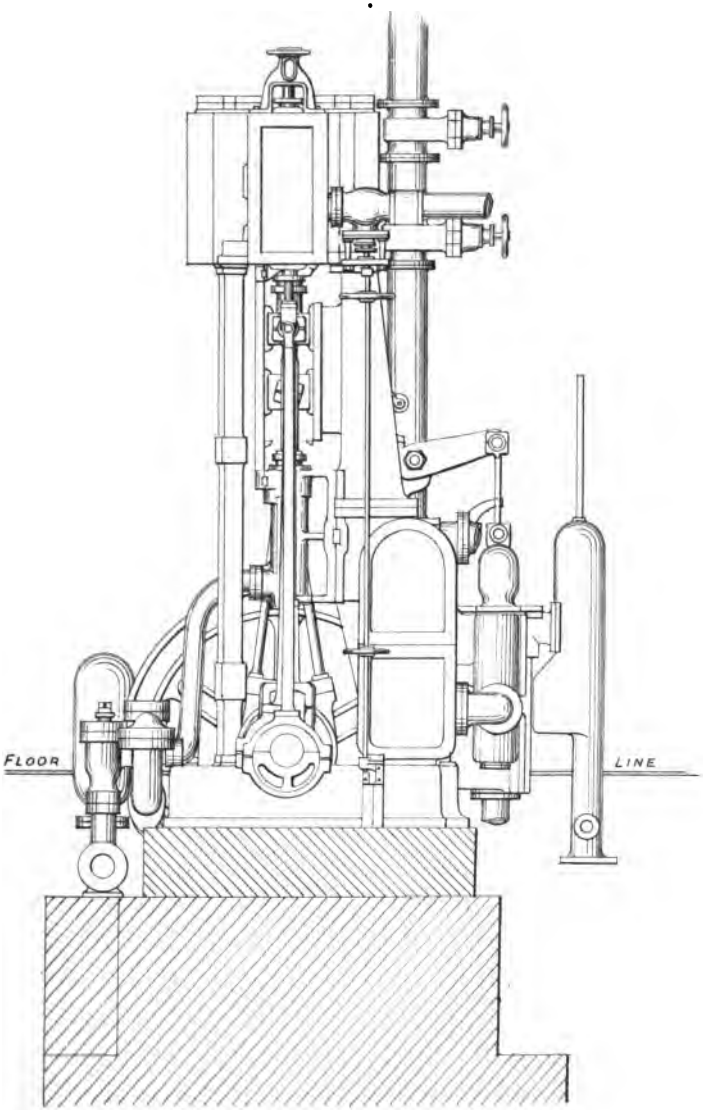

THREE-THROW TRIPLE EXPANSION PUMPING ENGINE

END VIEW.

THE NEW YORK
PUBLIC LIBRARY

ASTOR, LENOX AND
TILDEN FOUNDATIONS
R L

THE NEW YORK
PUBLIC LIBRARY

ASTOR, LENOX
TILDEN FOUN
R

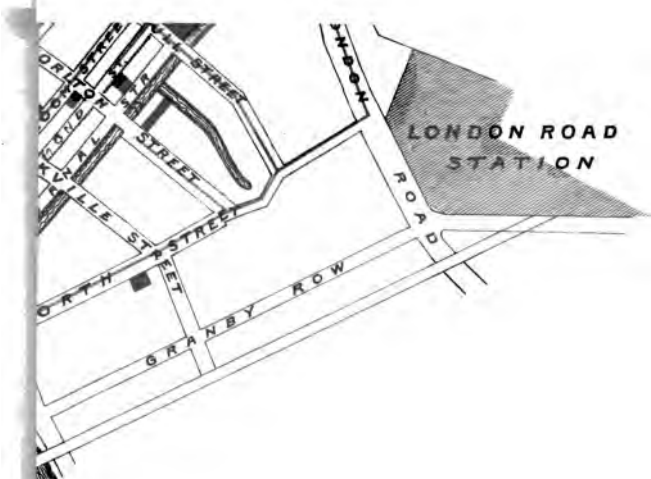

THE NEW YORK
PUBLIC LIBRARY

ASTOR, LENOX AND
TILDEN FOUNDATIONS
R L

THE COST OF STEAM RAISING.

READ SATURDAY, 27TH OCTOBER, 1894,

BY

Mr. J. HOLLIDAY, Assoc.M.I.C.E.,

DUBLIN.

The Cost of Power is one of the questions of the present day, and it has lately received much attention at the hands of well-known engineers with whom the author of this paper does not aspire to place himself in comparison.

In the Howard Lectures delivered before the Society of Arts in 1893, Professor Unwin took as his subject the Development and Transmission of Power from Central stations, and dwelt with such a thorough mastery of the subject on the cost of the Production of Steam Power that it is impossible even to criticise his remarks. In April of the present year, Mr. R. E. Crompton, M.Inst.C.E., &c., read a most suggestive and instructive paper on the Cost of Electrical Energy before the Institution of Electrical Engineers, which provoked an interesting discussion. In this paper also the question of the cost of steam power was considered in detail, and the part played by the boiler was considered both in the paper and in the discussion that followed the reading of it. But neither by Professor Unwin nor by Mr. Crompton, was the question of the cost of Steam Raising considered separately from the cost of the production of power, whilst both writers had to make large allowances for the first cost and maintenance of more ample reserve plant in the case of the production of power from central stations, than is generally considered necessary in private concerns.

Members of this Institution are probably, like the author, more interested in the production of steam power to meet a fairly constant load, or at any rate, one which does not vary much from hour to hour in the same day, although the difference between summer and winter work may be considerable. It often happens

that a large portion of the steam made is used for heating instead of for power, and for this reason it may be of interest to analyse the cost of raising steam without going into the larger question of the cost of steam power.

The subject naturally divides itself into several heads which may be enumerated thus:

1. Cost of Fuel delivered at the Boilers.
2. Working Expenses.
3. Maintenance, including Insurance.
4. Capital charges, including Interest, Depreciation, Rent, Rates and Taxes.

Technically, the cost of fuel should be included in the working expenses, but it forms such a large portion of the total cost and is, moreover, the one item for which the exact charge can be most readily ascertained, that it is advisable not only to treat it by itself but also to consider it the most important, and compare with it the several other items that go to make up the total cost of steam raising.

The second head "Working expenses" covers stokers' wages, superintendence, cost of cleaning boilers, economisers, &c.; also cost of water and the purification of the same if necessary, cost of illumination, oil and other stores, and the cost of the steam or other power used for driving feed pumps and any auxiliary engines used for the production of steam such as fan engines, (where forced draught is used), or mechanical stokers.

Under the head of maintenance are included all repairs to shells and furnaces of boilers, the economisers and feed-water heaters, feed pumps, and all the smaller plant in a boiler house which must be kept in thoroughly good working order if cheap steam is to be made. Maintenance of the brickwork of a Lancashire Boiler or Economiser is a point often overlooked, and which, if neglected, soon tells a tale in the fuel bill. The Insurance of the Boilers and Economisers, which of course means careful periodical examinations of all parts by skilled and disinterested inspectors is charged to maintenance, because it is a means of ascertaining defects in time to prevent them becoming serious and costly to repair. But whilst the up-keep of the plant is charged to maintenance, boilers and furnaces will not last for ever, so a charge must be made for depreciation which is

taken at a percentage on the first cost of the plant, whilst interest on capital is charged at 5% per annum. The fourth head in the above list also covers rent of site, rates, taxes, &c., all of which must be duly allowed for before the exact cost of producing a given amount of steam can be determined.

Before proceeding further we must first consider what is a convenient unit to adopt for the amount of work done. A horse power per hour is too small, and a horse power per annum is too large, whilst neither of these units conveys the required meaning, as in each case the idea of a steam engine is expressed.

Mr. Bryan Donkin and others have adopted as a basis of comparison between the performances of different boilers in the same district, the cost of fuel required to evaporate one thousand gallons (or ten thousand pounds) of water from and at 212° F. into steam at atmospheric pressure, and this unit is a very satisfactory one because three of the most varying factors in the cost of steam raising are covered by it, viz. :—

1. The cost of the fuel, which should be a measure of its quality in a given district.
2. The efficiency of the boiler.
3. The efficiency of the stoker whether human or mechanical.

It may perhaps be superfluous to mention that, in order to determine the value of the performance of a steam boiler or range of boilers, it is of but little use to know that 7, 8 or 9lbs. of water are evaporated per lb. of coal, because the relationship between fuel and water is dependent on so many variables, that it is only possible to compare two sets of figures when the leading circumstances under which each was obtained are known; and the expression of the cost of evaporating a thousand gallons as stated above seems to give, as concisely as possible, the minimum amount of information on which anything like a real comparison can be based. The figure, as a rule of course, applies only to the cost of fuel, but it is proposed in the following analysis of the total cost of steam raising to work out all the items for this unit, when it will be seen how large a portion of the total cost the fuel is, and as such, how far it may be a guide, in the absence of other information, in determining the total cost of steam raising.

Suppose the amount of water evaporated per lb. of fuel, and the cost of the fuel per ton as delivered into the stokehold is known, then the cost of fuel to evaporate 1,000 gallons is found thus:—

$$\text{cost of evap'g 1,000 galls.} = 4{\cdot}464 \frac{\text{cost of fuel per ton}}{\text{lbs. of water evap'd per lb. of fuel}}$$

the result being shillings or pence as the price of the fuel is expressed.

It is generally found that inferior fuels are less costly than higher class fuels on the basis of the calorific power of each, that is to say, a coal which costs 10s. a ton will evaporate in a certain boiler 8 lbs. of water per lb. of fuel, whilst a lower quality priced at 7s. 6d. per ton will evaporate as much as 7·5 lbs. of water per lb. of fuel in the same boiler. The cost of fuel per 1,000 gallons in the first case being 5s. 7d., and in the second case only 4s. 5½d., a difference of 25% in the price of the fuel with a diminution of but 6% in its calorific value, thus reducing the cost of evaporating 1,000 gallons by nearly 20%. Speaking generally, the true value of any fuel for steam raising depends on its price, and on its Calorific Power, or the number of lbs. of water that would be raised in temperature one degree Fahrenheit by the complete combustion of one pound of it, all the heat evolved in combustion being transferred to the water. This figure varies from 16,000 thermal units for best Welsh coal down to 8,000 or less for coke dust and other poor fuels. In order to show at a glance the amount of heat contained in one pennyworth of coal of various qualities and prices, Mr. Crompton prepared a table to illustrate his paper mentioned above; a copy of this table is appended. (See page 133.)

In all cases allowance must be made in the price of the coal for delivery in front of the furnaces and the price should also include the necessary expense of weighing it before delivery.

In a paper read by Mr. Bryan Donkin, M.Inst.C.E. before the North of England Institute of Mining and Mechanical Engineers in 1892, and published in the Proceedings of that Institution, three examples are given which show the economy of burning inferior and low priced fuels; all the trials being made under similar conditions in the same boiler.

	Kind of Fuel	Cost of Fuel per Ton		Water evaporated per lb. of fuel	Cost of Fuel per 1,000 gallons evaporated	
		s.	d.		s.	d.
A	Dust Coke	5	0	6·0 lbs.	3	8
B	Dust Welsh Coal..	10	0	8·5 ,,	5	2
C	Large Welsh Coal..	22	0	9·0 ,,	10	11

From such figures as these one might suppose that the case for inferior and low priced fuels is entirely made out, but economies such as those indicated in the preceding table are not to be obtained without some expenditure in other directions. Inferior qualities of fuel mean increased quantities to be handled, increased amounts of refuse to be removed both in the form of clinkers and in that of flue dust, more labour in stoking either by hand or by machine, larger furnaces and possibly more boiler and chimney power, or else the application of forced or mechanically assisted draught; and it is in such cases that the necessity arises of analysing more closely the cost of steam made by cheap fuel, in order that a saving promised by a low cost of fuel per 1,000 gallons evaporated, may not result in a final loss.

During the last four years the author has been directly interested in the working of a range of Lancashire boilers, some of which are fitted with furnaces for burning cheap and inferior fuels, and others fitted with plain furnaces using ordinary steam coal, consequently he has been enabled during a portion of the time to obtain very fairly representative figures of the total cost of working the plant, and to a certain extent to separate the cost of raising steam under the several heads mentioned above; also to make some comparison between the cost of steam made by cheap fuel with that made by ordinary fuel. As, however, there are some minor details of arrangement and management peculiar to the place and to the class of work which has to be performed, which differ from common practice, it has been thought better not to give the actual figures obtained over any special period of working, but average figures worked out from the experience acquired, and with allowances made where necessary for those points which differ from common

practice. These differences are mainly in connection with the method of heating the feed water, and therefore the figures given below for the economiser are not so well founded on actual observation as are the general mass of figures.

The boiler house contains 7 Lancashire boilers 28ft. 0in. long by 7ft. 0in. diameter, which are by no means new, so that the current charges for maintenance well represent their up-keep, and the same may be said of all the plant in the house. Three of these boilers are worked with forced draught and burn inferior fuel, and the other four burn ordinary steam coal with natural draught; all the furnaces are hand-fired. The demand for steam necessitates the constant use of six boilers both by day and night for 153 hours per week, and one boiler is kept under easy steam during the remaining 15 hours of that week, that is between 6 a.m. and 9 p.m. on Sunday.

The fuel used in the forced draught furnaces is breeze, *i.e.*, the screenings of gas coke which costs 5s. 0d. per ton when delivered in front of the boilers, and the supply of this fuel is practically unlimited. The fuel used for the natural draught boilers varies in quality and in price from 10s. 0d. to 14s. 0d. per ton delivered.

The quantity of water evaporated is about 2,000 gallons per hour and the rate of evaporation except during the 15 hours of Sunday does not vary more than 30% between the maximum and minimum amount used in any hour of the week, whilst the load factor, or the ratio of the average amount per hour to the maximum amount for any one hour, is very high being well over 0·80. Of the total quantity of water evaporated, 800 gallons are evaporated per hour by the forced draught boilers, and 1,200 gallons by the natural draught boilers, the large difference in the amount of work done is accounted for by the low quality of the fuel used in the forced draught furnaces. This contains 20 % or more of incombustible matter, so that for a large portion of the time one or more of these furnaces is doing nothing during cleaning and for some time before and after that operation. The following figures as calculated, come very close to the results of actual practice, and are given here to serve as a guide in estimating when actual measurements of coal and water are not available.

Breeze at 5s. 0d. per ton in forced draught furnaces evaporates 5 lbs. of water per lb. of fuel.

Coal at 11s. 6d. per ton in natural draught furnaces evaporates 8 lbs. of water per lb. of fuel.

Cost of fuel per 1,000 gallons evaporated;

By Forced draught Boilers,

$$\frac{4{\cdot}464 \times \overset{\text{s.}}{5}}{5} = \overset{\text{s.}}{4{\cdot}464} = 4\text{s. } 5\tfrac{1}{2}\text{d.}$$

By Natural draught,

$$\frac{4{\cdot}464 \times \overset{\text{s.}}{11{\cdot}5}}{8} = \overset{\text{s.}}{6{\cdot}417} = 6\text{s. } 5\text{d.}$$

							Gallons
3 Forced draught Boilers,	153	hrs. per week,	800	galls. per hr.	=		122,400
3 Natural ,,	153	,,	1,200	,,	=		183,600
1 ,, ,,	15	,,	200	,,	=		3,000
				Total for week,			309,000

then 122,400 gallons	at	4·464	shillings per 1000	=	546·39
183,600 ,,		6·417	,,	=	1,177·86
3,000 ,,		6·417	,,	=	19·25
					1,743·50

Average weekly fuel bill, £87. 3s. 6d.

The average for a normal week being 5s. 7¾d. per 1,000 galls.

For 12 weeks in the year one or another of the three Forced draught boilers is idle for cleaning and the fourth Natural draught boiler is worked and the weekly fuel bill is higher, thus;

							Gallons
2 Forced draught Boilers,	153	hrs. evaporating,	550	galls. per hr.	=		84,150
4 Natural ,,	153	,,	1,450	,,	=		221,850
1 ,, ,,	15	,,	200	,,	=		3,000
							309,000

						£	s.	d.
then 84,150 @	s. 4·464	per 1,000 galls.	=	375·46				
221,850 @	6·417	,,	=	1,423·61				
3,000 @	6·417	,,	=	19·25				
				1,818·32	=	90	18	3¼

Fuel bill for a special week, £90. 18s. 3¼d.

The average cost for a special week is 5s. 10¼d. per 1,000 gallons. The average cost of fuel for the year will thus be 5s. 8¼d. per 1,000 gallons evaporated. Water is supplied to the boilers by one of a pair of double-cylinder double-acting feed pumps, which forces it through an exhaust steam feed-heater and an economiser, by which its temperature is raised to 215°

Fahrenheit; steam is made at an average of 58lbs. pressure per square inch., the safety valves being set to blow at 60lbs. If the water were supplied at boiling point and steam made at atmospheric pressure, the cost of fuel per 1,000 gallons evaporated from and at 212° Fahrenheit would be 4s. 10½d. This figure is no doubt a low one for the district in which it is obtained, where the price of fuel is much higher than it would be for a similar quality in Lancashire, but, as previously mentioned, the conditions are highly favourable to economy of fuel in consequence of the steadiness of the demand for steam and the absence of any necessity for banking fires at nights or for meal times, except on Sundays.

In the attached tabulation of the costs of steam raising in this boiler-house per 1,000 gallons evaporated, the item of the fuel has been set down by itself apart from the Working Expenses, though of course it should be included with them, but forming as it does so large a portion of the total cost, it seems best to give it alone and see how the other charges come out and compare with it.

Under the head of working expenses the next item of importance is that of wages; for the boilers in question three gangs of two men each are employed, thus each man fires three boilers or six furnaces. The night men work 8 hours continuously, and the day men the remaining 16 hours in spells of 3 hours each, and as each man makes 9 hours per day, for two hours each day both gangs are in the house and in this time the necessary cleaning and sweeping is performed by the two who are not firing. The Sunday work is performed by the day men in turn, the day being divided into two parts, and on Sunday night the work is the same as on any other night, and the night men are therefore paid for 7 nights work per week. Frequent changes are made so that no one man gets too much night work. Wages are taken at 24 shillings per week of 54 hours for day work and 48 hours for night work. The boiler house and the whole of the plant are in the charge of a foreman who has also other duties to perform, so only one-third of his time is charged against Steam Raising, at the rate of 36s. 0d. per week. It is considered that £50 per annum is an equivalent for the time which the engineer in charge devotes to this portion of his duties.

The removal of Ashes and Clinkers, a daily necessity, may now be considered. The incombustible matter from the breeze amounts to 22% and 10% for the large coal, and for the average week the consumption is 102 tons of breeze and 110 tons of large coal, the refuse then is:—

from Breeze - -	$102 \times 0{\cdot}22 =$	22·44 tons.
,, Large Coal -	$110 \times 0{\cdot}10 =$	11·00 ,,
	Total	33·44 ,,

and is disposed of at a cost of 1s. 6d. per ton.

In addition to the amount of refuse removed daily there is also the contents of the flues when they are cleaned out, and this amounts to eight tons for a forced draught boiler and three tons for a natural draught boiler. This is equivalent to about 2·25 tons per week for the forced draught boilers and 0·75 tons per week for the natural draught boilers, in all three tons per week extra, making the total amount to be removed 36·5 tons weekly and the weekly cost for same £2. 14s. 9d.

Flue sweeping and boiler cleaning becomes necessary at the end of every 10 weeks for the forced draught boilers and at the end of every 14 weeks for the natural draught boilers. Each of these latter boilers are idle in turn when not required, thus the period that elapses between each time of cleaning is somewhat extended. Two men are able to complete the cleaning of one of the forced draught boilers (including the sweeping of the shell and flue walls and washing out sludge and loose scale from inside the boiler) in four days, the same operations for one of the natural draught boilers can be completed in two days. The reason for this difference is the abnormal quantity of dust which is allowed to accumulate in the flues of the forced draught boilers. This is possible because with forced draught a comparatively small area of flue is sufficient for the passage of the products of combustion, the expenditure of the small amount of extra power required to propel the gases is trifling compared with the expense of even one additional cleaning per annum. The boiler cleaning is not done by the firemen, but by some of the general labourers in the works, and on account of the trying nature of the work an addition is made to their regular pay, of 3s. 6d. per diem of 10s,

or 12s. per boiler cleaned. The cost of cleaning which is practically all labour amounts to :—

	£	s.	d.
Forced draught, 2 men 4 days each @ 3s. 6d.	1	8	0
Extra money		12	0
Labour for cleaning one boiler - - - -	£2	0	0
,, ,, three boilers - - - -	£6	0	0

One tenth of this will be the charge on each week's work, viz. :—12s. 0d.

	£	s.	d.
Natural draught, 2 men 2 days each @ 3s. 6d.	0	14	0
Extra money	0	10	0
Labour for cleaning one nat. draught boiler	£1	4	0
,, ,, four ,, boilers	£4	16	0

One fourteenth of this will be the charge on each week's work, viz. :—6s. 10d.

Thus the total charge for labour of boiler cleaning on one week's work is 18s. 10d. in addition to the cost of removing the dust taken out as given above.

The cleaning out of the Economiser is done twice a year and two men are employed at the work two days on each occasion, but the economiser is really out of work three days each time, say one week per annum, and in addition to the actual cost of cleaning there is the loss due to feeding the boilers with water at 90° F. instead of 215° which is equivalent to an addition of 11·2% on the fuel bill, or £10. 8s. 0d. for the week.

	£	s.	d.
Cleaning Economiser, 2 men 2 days each @ 3s. 6d.	0	14	0
Extra money	0	10	0
Removing 4 tons of dust @ 1s. 6d. - - - - - -	0	6	0
Cost of each cleaning,	£1	10	0
Cost of two cleanings,	3	0	0
Extra fuel as above for the week the Economiser is idle - - - - - - - - -	10	8	0
	£13	8	0

or 4s. 0d. per week.

The water used for steam raising is charged for at the rate of 2d. per 1,000 gallons, and as it contains a considerable amount of lime it is softened at the cost of another 1d. per 1,000 gallons.

Very little of the steam is returned as condensed water, so it seems fair to take it that that which is returned is an equivalent for what is blown out of the boilers or is used for cooling ashes and washing down the place, thus the charge for water is 3d. per 1,000 gallons or £3. 17s. 3d. per week.

As the boilers work day and night the cost of illumination is a not inconsiderable item; 20 gas burners which are lighted for an average of 12 hours per day all the year round represent a consumption of 420,000 cubic feet per annum and at 3s. 4d. per 1,000 cubic feet this amounts to £70 or £1. 7s. 0d. per week.

The cost of Oil, Waste, for Fan, Engine and Pumps, Gauge Glasses, and other sundries, generally grouped under the heading of Stores amounts to £1. 2s. 0d. per week on the average of two years work. In the total of the working expenses proper allowance must be made for the steam used by the feed pump and the fan engine for the forced draught boilers. Steam pumps are used for feeding the boilers, and these though very convenient and reliable use very large quantities of steam for the work done. In order to minimise the loss in this direction, the exhaust steam from the pumps and also that from the fan engine is turned into a small feed-heater or surface-condenser, where it gives up a large portion of its heat to the feed-water which also passes through this heater on its way from the pump to the economiser. In some recent experiments with a steam pump the exhaust steam was thus used to heat all the water pumped, and it was found that the water was heated 13° Fahrenheit; the quantity was 2,000 gallons per hour, and the horse-power 3; there is thus but a small loss of heat, only that converted into energy and that lost by radiation. In this experiment the apparent consumption of steam is about 80lbs. per HP per hour, or 240lbs. total per hour all of which would be lost but for the heater. As it is, however, the actual loss of heat is very trifling and the small amounts entered in the balance sheet against these items really overstate the case. It may here be noted that by utilizing the exhaust from the feed pump in the way indicated a saving of 1¼% on the fuel bill is possible of attainment.

We have now a figure for the cost of fuel and another for the other working expenses, and the proportion of the latter to the

former seems to justify the course of treating them separately. It also shows that where other figures are not easily obtainable the cost of fuel required to evaporate 1,000 gallons is a very fair criterion of the working of the plant, and it is also in that direction where a reduction in working expenses may most successfully be sought.

In considering the cost of maintenance it is not possible to analyse so closely as has been done above with the various items of expense. The only reliable results are those obtained over lengthened periods of working, otherwise errors will arise on account of the time which must necessarily elapse between the execution of extensive repairs, and we may be saddling one item with the whole of an expense that should have been distributed over a longer period, or it may be that a big job may escape notice altogether. For this reason all the costs of maintenance during a period of 2½ years have been considered in arriving at the average results given below, and a longer period would have been taken had it been possible.

There is one constant and periodical charge which is of the first importance where boilers are concerned, it is the Insurance, which is taken at £2. 0s. 0d. per boiler per annum and includes the economiser and feed-heater. The Author is well aware that policies (for £1,000) are issued at much below the above rate, but he considers that in order to secure thoroughly reliable inspection which is the main end and object of boiler insurance, a sum must be paid which shall allow of the work being effectually performed. This charge amounts to £14. 0s. 0d. per annum or 5s. 4½d. per week.

The maintenance of the Plant has been found to work out thus:

	£	s.	d.	
Shells of Boilers and Mountings ...	1	6	11	per week.
Furnaces	0	12	7	,,
Brickwork of Boilers and Furnaces...	0	13	0	,,
Economiser, including Brickwork ...	0	9	2	,,
Feed Pumps	0	13	3	,,
Fan and Engine	0	1	4	,,
Feed Heater	0	0	7	,,
Firing Tools and Sundries	0	11	4	,,
Steam Mains, including Covering ...	0	2	3	,,
Total	£4	10	5	

The above is probably more correct in the total than in the details, as it is found that items are constantly being charged against the boilers that should have been charged to the furnaces or to some other part of the work. The figure given for the brickwork is, however, correct as it stands, as considerable pains were taken to arrive at the cost of this particular item. The charge for Feed Pumps is no doubt high, but as these pumps are used to a certain extent as water meters, special pains and time are devoted to keeping them in thorough repair. The maintenance of the fan and engine driving it, is very low, but it fairly represents all that has been expended on them since they were started to work more than five years ago, and the extra outlay on really high-class machines has been amply justified. Under the head of steam mains is included the maintenance of all the pipes in the boiler house, *i.e.*, High pressure and exhaust steam mains, feed-water mains and blow-out pipes, all of which except the last are covered with a 2in. thickness of non-conducting composition which requires a good deal of attention to keep in effective order.

The maintenance of the Boiler House is put down at £25. 0s. 0d. per annum, and that of the chimney at £2. 10s. 0d. per annum; this sum covers the painting of the iron work of the roof once every year. Fire Insurance of the Boiler House is taken at £2. 10s. 0d. per annum. These items come to £30. 0s. 0d. per annum or 11s. 6½d. per week in addition to the figures already given. The total cost of maintenance thus works out at a very low figure compared with the Fuel Bill.

Capital Account. Interest on the first cost is taken all round at 5% per annum, and the various items as charged under the head of Estate are these:—

7 Boilers at £350 each	£2,450
Economiser, 500 pipes	750
Foundations of Boilers and Setting	250
,, ,, Economiser ,, ...	50
Chimney	700
Boiler House, Foundations, Roof, &c...	2,000
Special Furnaces for 3 Boilers	250
Fan and Engine for Forced Draught	110
Two Feed Pumps	150
Steam Pipes, Feed Mains, Valves, &c.	150
Firing Tools, Barrows and Sundries	50
Exhaust Steam Feed Heater	40
Covering Boilers and Steam Pipes	50
	£7,000

THE COST OF STEAM RAISING.

Water evaporated per week in ...	FORCED DRAUGHT BOILERS. 113,560 GALLONS.					NATURAL DRAUGHT BOILERS. 195,440 GALLONS.					ALL BOILERS 309,000 GALLONS.				
Costs	Per week.		Per 1,000 Galls.		Per cent on total.	Per week.		Per 1,000 Galls.		Per cent on total.	Per week.		Per 1,000 Galls.		Per cent on total.
	£ s. d.	£ s. d.	Pence.	s. d.		£ s. d.	£ s. d.	Pence	s. d.		£ s. d.	£ s. d.	Pence	s. d.	
FUEL		25 6 11½	1·27	4 5·56	58·0		62 16 11½	0·19	6 5·17	75·5		88 3 10½	0·73	5 8·5	70·0
WORKING EXPENSES—															
Wages	3 10 1¾	.....	7·41	.....	.....	4 9 10¼	.....	5·52	.....	.....	8 0 0	.....	6·21	.....	.....
Superintendence...	0 15 7¾	.....	1·65	.....	.....	0 15 7¾	.....	0·96	.....	.....	1 11 8½	.....	1·21	.....	.....
Removal of Refuse	1 17 0½	.....	3·91	.....	.....	0 17 8½	.....	1·10	.....	.....	2 14 9	.....	2·13	.....	.....
Flue Sweeping	0 12 0	.....	1·27	.....	.....	0 6 10	.....	0·42	.....	.....	0 18 10	.....	0·73	.....	.....
Cleaning Economiser...	0 2 0	.....	0·32	.....	.....	0 2 0	.....	0·11	.....	.....	0 4 0	.....	0·16	.....	.....
Water	0 18 9	.....	2·00	.....	.....	1 12 9	.....	2·00	.....	.....	2 11 6	.....	2·00	.....	.....
Purifying and Softening do. ...	0 9 4½	.....	1·00	.....	.....	0 16 4½	.....	1 00	.....	.....	1 5 9	.....	1·00	.....	.....
Illumination...	0 12 0	.....	1·27	.....	.....	0 15 0	.....	0·92	.....	.....	1 7 0	.....	1·05	.....	.....
Stores	0 10 3	.....	1·08	.....	.....	0 11 9	.....	0·73	.....	.....	1 2 0	.....	0·85	.....	.....
Steam for Auxiliary Engines ...	0 15 8	10 2 10½	1·65	1 9·47	23·2	0 3 2	10 11 1	0·19	1 0·95	12·7	0 18 10	20 13 11½	0·73	1 3·35	15·7
MAINTENANCE—															
Boiler Shells and Mountings...	0 12 0	.....	1·27	.....	.....	0 14 11	.....	0·93	.....	.....	1 6 11	.....	1·05	.....	.....
Furnaces	0 6 4	.....	0·66	.....	.....	0 6 3	.....	0·38	.....	.....	0 12 7	.....	0·50	.....	.....
Brickwork	0 6 0	.....	0·64	.....	.....	0 7 0	.....	0 43	.....	.....	0 13 0	.....	0·50	.....	.....
Economiser	0 4 7	.....	0·48	.....	.....	0 4 7	.....	0·28	.....	.....	0 9 2	.....	0·36	.....	.....
Feed Pumps...	0 4 10½	.....	0·51	.....	.....	0 8 4½	.....	0·50	.....	.....	0 13 3	.....	0·51	.....	.....
Fan and Engine...	0 1 4	.....	0·14	.....	.....	0 0 0	.....	0·00	.....	.....	0 1 4	.....	0·05	.....	.....
Feed Heater...	0 0 2½	.....	0·02	.....	.....	0 0 4½	.....	0·02	.....	.....	0 0 7	.....	0·02	.....	.....
Firing Tools, &c.	0 5 8	.....	0·60	.....	.....	0 5 8	.....	0 35	.....	.....	0 11 4	.....	0·44	.....	.....
Steam Mains, &c.	0 1 0	.....	0·11	.....	.....	0 1 3	.....	0·08	.....	.....	0 2 3	.....	0·09	.....	.....
Fabric of Boiler House	0 4 0½	.....	0·43	.....	.....	0 5 9½	.....	0·36	.....	.....	0 9 9½	.....	0·37	.....	.....
" Chimney	0 0 3	.....	0·03	.....	.....	0 0 4	.....	0·02	.....	.....	0 0 7	.....	0·02	.....	.....
Insurance of Boilers...	0 2 3¾	.....	0·24	.....	.....	0 3 0¾	.....	0·19	.....	.....	0 5 4½	.....	0·21	.....	.....
" " Buildings	0 0 3	2 8 10	0·03	0 5·16	5·6	0 0 4	2 17 11	0·02	0 3·56	3·5	0 0 7	5 6 9	0·02	0 4·14	4·2
CAPITAL, &c.—															
Interest	3 1 6	.....	6·49	.....	.....	3 13 1	.....	4·48	.....	.....	6 14 7	.....	5·23	.....	.....
Depreciation...	2 3 6	.....	4·59	.....	.....	2 11 9	.....	3·18	.....	.....	4 15 3	.....	3·67	.....	.....
Rent of Site...	0 4 3	.....	0·46	.....	.....	0 5 7	.....	0·34	.....	.....	0 9 10	.....	0·38	.....	.....
Taxes	0 6 3	5 15 6	0·66	1 0·20	13·2	0 8 3	6 18 8	0·51	0 8·51	8·3	0 14 6	12 14 2	0·56	0 9·34	10·1
Totals		43 14 1¾		7 8·39	100·0		88 4 7¼		8 6·19	100·0		126 18 9		8 1·36	100·0

TABLE SHOWING NUMBER OF BRITISH THERMAL UNITS IN ONE PENNYWORTH OF FUEL OF VARIOUS QUALITIES AND PRICES.

Price of Fuel in Shillings per Ton of 2,240 lbs.

B. Th. Units per lb. of Fuel.	5/-	6/-	7/-	8/-	9/-	10/-	11/-	12/-	13/-	14/-	15/-	16/-	17/-	18/-	19/-	20/-	21/-	22/-
10000	373300	311000	266666	233333	207407	186666	169600	155555	143589	133333	...	...	...	...	...	...	...	...
10200	380800	317200	272000	238000	211600	190400	173100	158600	146500	136000	126900	...	...	...	...	...	...	...
10400	388300	323400	277300	242700	215700	194100	176500	161700	149300	138600	129400	121300	...	...	...	...	...	...
10600	395800	329700	282700	247300	219850	197900	179900	164900	152200	141300	131900	123700	116500	...	...	...	...	...
10800	403300	335900	288000	252000	224000	201700	183300	167900	155100	144000	134400	126000	118600	112000	...	...	...	...
11000	410800	342100	293300	256700	228100	205400	186700	171100	157900	146600	136900	128300	120500	114100	108000	...	...	...
11200	418200	348300	298700	261300	232300	209100	190100	174200	160800	149300	139400	130700	123000	116200	110000	104500	...	...
11400	425700	354600	304000	266000	236400	212900	193500	177300	163700	142000	141900	133000	125200	118200	112000	106400	101300	...
11600	433200	360800	309300	270700	240600	216600	196800	180400	166600	154600	144400	135300	127300	120300	114000	108300	103100	98400
11800	440600	367000	314700	275300	244600	220300	200200	183500	169400	157300	146900	137700	129600	122300	116000	110200	104900	100100
12000	448100	373200	320000	280000	248800	224000	203600	186600	172300	160000	149400	140000	131800	124400	118000	112000	106700	101800
12200	455600	379400	325300	284700	252900	227800	207000	189700	175200	162600	151900	142300	133900	126500	120000	113900	108400	103500
12400	463000	385700	330700	289300	257100	231500	210400	192800	178100	165300	154300	144700	136200	128500	121700	115800	110200	105200
12600	470500	391900	336000	294000	261200	235200	218800	195900	180900	168000	156800	147000	138400	130600	123600	117600	112000	106900
12800	478000	398100	341300	298700	265400	239000	217200	199000	183800	170600	159300	149300	140500	132700	125700	119500	113800	108500
13000	485400	404300	346700	303300	269500	242700	220600	202100	186700	173300	161800	151700	142800	134700	127500	121400	115600	110300
13200	492900	410600	352000	308000	273700	246400	224000	205300	189500	176000	164300	154000	145000	136800	129500	123200	117300	112000
13400	500400	416800	357300	312700	277800	250200	227400	208400	192400	178600	166800	156300	147100	138900	131750	125100	119100	113700
13600	507800	423000	362700	317300	282000	253900	230800	211500	195300	181300	169300	158700	149400	141000	133500	127000	120900	115700
13800	515300	429200	368000	322000	286100	257600	234200	214600	198200	184000	171800	161000	151500	143100	135750	128800	122700	117100
14000	522800	435400	373300	326700	299300	261400	237600	217700	201000	186600	174300	163300	153700	145200	137500	130700	124400	118800
14200	...	441700	378700	331300	294400	265100	241000	220800	203900	189300	176800	165700	156000	147200	139500	132500	126200	120500
14400	...	...	384000	336000	298600	268800	244400	223900	206800	192000	179200	168000	158100	149300	141500	134400	128000	122200
14600	...	...	...	340700	302700	272500	247800	227000	209600	194600	181700	170300	160300	151400	143500	136300	129700	123900
14800	...	...	...	...	306900	276200	251200	230100	212500	197300	184200	172700	162500	153400	145500	138100	131500	125600
15000	...	...	...	...	...	280000	254500	233200	215400	200000	186700	175000	164700	155500	147300	140000	133300	127300
15200	...	...	...	...	...	...	257900	236300	218200	202600	189200	177300	166900	157600	149100	141900	135100	129000
15400	...	...	...	...	...	...	...	239400	221100	205300	191700	179700	169100	159600	151000	143700	136900	130700
15600	...	...	...	...	...	...	...	...	224000	208000	194200	182000	171300	161700	153000	145600	138600	132400
15800	...	...	...	...	...	...	...	...	...	210600	196700	184300	173500	163800	155000	147500	140400	134100
16000	...	...	...	...	...	...	...	...	...	...	199200	186700	175700	165800	157000	149300	142200	135800

DISCUSSION.

The PRESIDENT (Mr. Thomas Daniels) invited discussion on the subject.

Mr. ALFRED SAXON was under the impression that the various costs which the author had submitted would not be so useful to them, as if they had been deduced from experiments in textile factories with which the majority of members in this county were acquainted. He believed they were all interested in the production of steam power to meet a fairly constant load and where the work did not vary. In the case under consideration, however, there were so many points which they would not have to consider, but which the author was bound to take into account, that comparisons could hardly be made.

He was of opinion that the author could not have selected a more convenient unit for the purpose of his communication, and which was one which Mr. Bryan Donkin had previously adopted. In this respect, it might be interesting to the members to learn what the unit would work out to, on the horse-power basis, at per hour or per annum. He would like to know also how the author arrived at the constant, 4·464, indicated on page 123, to obtain the cost of fuel to evaporate 1,000 gallons He quite concurred with the author's remarks respecting the advantages and disadvantages of cheap fuels, and the table given on page 121 was very interesting. Boiler stoking appliances were innumerable, but unfortunately while some patents were successful in many instances, in others they entirely failed. The author had referred to the cost of coal, and evidently it was very costly in Ireland, about double its price in England. He presumed the engines were small and were distributed over the works; the feed pumps were put down in the boiler house, and through that, disadvantages must accrue, although they were informed that the water from these pumps was passed through a feed water heater, and thus got as much benefit as possible. They were well aware that in a large textile mill there would be feed pumps attached to the main engines, the

condensing water would be used, and where probably in the case under notice they were using water at 60° the ordinary mill owner would be using it at 100°, besides not having to work with a separate plant. If high pressure boilers had been used (which was more like modern practice) the results might have been considerably modified. It seemed to him that the period elapsing between the time of cleaning the boilers and flues was exceptionally long, and that ordinary practice would necessitate them being cleaned oftener. In conclusion, he had no hesitation in saying that the author had made his tests in an extraordinarily careful and methodical manner, and certainly very different from the majority of tests, where so much was left to conclusion and guess-work as to make them practically of no use.

Mr. JOSEPH HARTLEY, referring to mechanical stokers, said the author had had considerable experience in steam raising, both with them and without them; perhaps, therefore, he would favour the meeting with his experience on that point. In regard to this matter, it would be remembered that during the recent visit of the Association to Peel Mills, Bury, the boilers there were mechanically fired. That day, he had again visited Peel Mills, and strange to say the mechanical stokers had entirely disappeared. Hand firing had been substituted, and although only washed slack was being used a considerable saving had occurred.

On the contrary, however, he could call to mind a place, where, with a boiler 30ft. × 7ft., they could not possibly raise sufficient steam to drive the necessary load with hand firing, but when Perret's furnaces were applied they burned 3½ tons of Welsh slack in 12 hours, or about 50% more than they could burn by hand firing, and consequently raised enough steam to drive all their load easily.

Mr. Saxon had referred to the use of donkey pumps for feeding boilers and the use of feed pumps on the engine. It was well known that with donkey pumps the steam must be carried on the piston for the full length of the stroke. He knew of several places where considerable advantage had been derived by turning the exhaust steam from the donkey pump either into the feed water heater or into the suction pipe

of the pump. It might not be inappropriate to mention, that he had personally seen and examined the boilers on many occasions, referred to by the author, and with which the latter had made the various experiments, and he could fully testify to the systematic thoroughness with which the tests were conducted.

The periods elapsing between the times of cleaning the boilers had been commented upon as being too long, but he could definitely say that the times (as stated by the author) were quite short enough, and in fact, he himself had looked into the furnaces after they had been running ten weeks minus cleaning, and had found scarcely any perceptible difference. On this point, however, it must be borne in mind that the boiler cleaning under consideration was not done in an indifferent manner, similar to cases where the boiler was simply stopped on Saturday and had to be ready by Monday morning following; the cleaning was thoroughly done, and the boiler and fittings overhauled.

Mr. Saxon remarked that if the boilers had been high-pressure, say 160lbs. instead of 60lbs., the author's results would probably have been considerably modified. He did not think so, because the results simply hinged on the fact of how much coal or fuel was used to evaporate a thousand gallons of water, and the pressure therefore, to his mind, was a secondary consideration.

He readily seconded Mr. Saxon's request that the author should state to them his results in the cost per indicated horse power per hour. It could not be denied that in many of the tests made in Lancashire too much account had been taken of the lbs. of coal per horse-power per hour consumed, instead of the quantity of steam or water used per hour per horse-power. In the former cases the engine makers had been credited with economy not obtained, to the boiler makers disadvantage and *vice versa;* whilst, undoubtedly, in the latter method the results were more satisfactory to the engine maker, boiler maker and the manufacturer.

Mr. John Taylor thought the paper was a carefully prepared statement of the different facts in connection with the particular works under consideration, but he did not think it was applicable to practice in this district,

He was of opinion that the remark on page 120, re the calorific value of fuel, needed a little correction, as all the heat evolved in combustion did not go into the water, a certain amount being lost through various causes.

On page 125 reference was made to the amount of flue dust taken from the boilers, which he certainly thought was extraordinarily excessive.

Evidently water was very cheap in Dublin, which, according to the author (page 126) was only 2d. per thousand gallons, whereas in Manchester it was from 7d. to 9d. per thousand gallons. It might not be inappropriate to mention, that factories in England only worked in the day time, and consequently it would be difficult to make a comparison according to the paper.

Mr. Joseph Nasmith entirely dissented from the opinions expressed by the previous speaker, and maintained that if the paper was properly considered it was an exposition from actual practice of the cost of evaporating water for the purpose of steam raising. It appeared to him that, the criticism that the points in the paper were inapplicable to ordinary practice, was altogether beyond the mark. Hitherto the tests which had been made of appliances for raising steam, had been made, as pointed out by Mr. Hartley, as to how much coal was used for each horse-power per hour. Now modern practice was beginning to tell them, and he thought it was common sense to assume it, that inasmuch as the cost of steam raising and using was divided between two separate and distinct plants, they ought in estimating the value of each portion of the actual plant, to take each by itself and see what it did in the way of economy. Taking a typical case, for instance, there was the boiler, which was the instrument for raising the steam, and then the engine which utilized it. It might be that the boiler was not making the percentage of steam it ought to do, and not evaporating the maximum number of gallons of water it should do, while the steam engine was working exceptionally economically. Consequently, by massing together the results obtained from both plants, a reduction in the cost of coal burned appeared, which was entirely attributable to one portion of the plant and in no way to the other. In his opinion, therefore, the valuable portion

of this paper appeared to be in the fact that it dealt with one portion of the plant only. It was quite immaterial whether it was raising steam for one or twenty engines. It was a plant for evaporating water and producing steam, and that being so, they must look at it from one point of view and disregard the question of engine power entirely. In this sense the paper furnished valuable data, and data in every way reliable.

In the *Oldham Chronicle* of that day there appeared some figures of the coal consumption of six Oldham mills, which on the face of them showed some remarkable discrepancies. The figures were as follow, the cost being that of coal for three months :—

				£	s.	d.	
Leesbrook,	85,920	spindles,	£271 =	3	3	1·24	per 1,000
Moss,	101,472	,,	£416 =	4	1	11·64	,,
Moorfield,	76,520	,,	£383 =	5	0	1·56	,,
Hope,	66,678	,,	£341 =	5	2	2·98	,,
Sun,	130,692	,,	£756 =	5	15	8·21	,,
Duke,	70,380	,,	£326 =	4	11	9·13	,,

From this it was apparent that the cost of driving a thousand spindles varied from £3. 3s. 1·24d. to £5. 15s. 8·21d.

It was of course necessary to take into account many other circumstances, and a comparison of this kind could only be approximate. Chief among the circumstances was the relative number of twist and weft spindles. The percentages of each were in this case as follows :—

Leesbrook	23·74	twist	76·26	weft
Moss	25·42	,,	74·58	,,
Moorfield	26	,,	74	,,
Hope	57·57	,,	42·43	,,
Sun...	62·66	,,	37·34	,,
Duke	33·38	,,	67·62	,,

These figures showed that in one or two mills there was a preponderance of twist spindles, which being heavier and running more quickly, required more power to drive. It would be seen, however, that the first three of the mills named, nearly approached one another in this respect, while their coal consumption varied considerably in cost. Although these figures

were by no means absolutely safe for comparison, they did show that under very similar conditions there was a great discrepancy in the cost of steam raising, and they furnished a proof of the necessity for a clear understanding on the subject.

Was there not, therefore, a strong argument in favour of a better division of the method of testing boilers, and of the necessity of absolutely knowing what every part of a plant was doing? Personally, he thought the whole engineering world, whether connected with brewing, textiles, or anything else, was indebted to the author for the admirable manner in which he had laid the facts before them.

The question of the use of the inferior versus the better quality of fuel had been alluded to, and from what he had seen, he was inclining strongly to the opinion that in many cases, with furnaces and appliances specially adapted for dealing with it, the use of inferior fuel was likely to become more common.

The author had briefly mentioned the subject of gaseous fuel. In regard to this he might admit that it was a question which for many years he had been greatly interested in, though he must confess that from his observations his early views had been considerably modified. The difficulty regarding the use of gaseous fuel was mainly one of regulation, since as fast as the gas was produced the burner would pass it, despite every system of checking by valves, and much of it would go up the chimney, with uneconomical results. It was quite possible, however, that where gas was required for, say heating a mill, it might be an economical method of raising steam. On the other hand, if a plant had to be put down for providing fuel for steam raising, and was not used for any other purpose, he thought it would be a mistake, except on one understanding. The question turned upon the possibility of so far diminishing the velocity of the gas, that instead of the flame rushing through the flues it should move lazily, and in a sense "lave" the heating surface. A kind of lazily licking flame was what was wanted, and this could be obtained by passing the gas into a gasometer, and drawing it from thence. Of course this involved the provision of scrubbers and recovery plant where bituminous coal was used. In the case of Dowson gas, however, it was hardly likely that the quantity of ammoniacal liquor would pay for recovery.

So far as his knowledge extended, the most successful and economical installation of a gas plant for heating purposes was constructed so as to give a slow moving current of gas, which lingered, when ignited, about the surfaces being heated.

The PRESIDENT remarked that he should be glad to hear an expression of opinion from any of the members as to the advantage or disadvantage of using inferior fuel with ordinary Lancashire Boilers.

Mr. E. MARSHALL thought that the paper prominently brought before them the question of forced draught versus natural draught. In reference to the former he might say that recently he had a little experience, as in two of the boilers, one 7ft. 6in. × 30ft., one 7t. × 30ft., under his control, they had adopted a forced draught, with the consequence that they got more power at a less cost. September last was practically the first clear month, and their consumption of fuel was about as before, namely, 240 tons, but the cost was 6/9 instead of 9/- per ton, showing a saving practically of 240 two-shillings and threepences. He had tried slack at 5/10 per ton, but it made the work of the fireman so hard that he abandoned it.

The PRESIDENT assumed that the blast from the forced draught so permeated the small coal that it burnt as readily as that of bigger size.

Mr. JOHN CRAVEN (Past-President) congratulated the author and the Association upon the reliable statements which had been presented, and especially for the comparison between inferior fuel and that of the ordinary coal. Evidently the author's conclusions had been deduced from actual practice, and it was noticeable that all the collateral circumstances were carefully noted, whether they were favourable or the reverse to the result.

What he knew personally about the consumption of coke dust or the sweepings of gas works, the simple advantage of burning it was that, otherwise it would have to be carted away as refuse. Certainly he had found no advantage in using coke dust in comparison with the usual class of fuel adopted in this district,

the former causing such an accumulation of dust and dirt in the flues, and also the additional cost of firing was an important factor.

He quite coincided with the remarks of Mr. Nasmith in respect to gaseous fuel, where it was necessary to create gas in a furnace and then use it for raising steam. He readily admitted that there were many cases where gaseous fuel could be adopted with advantage, but to provide gas for the purpose of burning it in the flues of the steam boiler was, he thought, now an exploded theory.

Mr. John Meldrum remarked that probably it was unnecessary for him to say that he had had a more than ordinary experience in the utilization of what might be termed waste products for steam raising purposes. Particularly had this been the fact in connection with ironworks and collieries, because in those cases the waste fuel was on the spot, and there was practically no market except at almost prohibitive carriage rate. In many cases by the adoption of forced draught appliances an economy of 75 % had been reached. A typical case, at that moment in his mind, was that of the West Hartlepool Iron and Steel Co. Prior to the adoption of the forced draught system, as supplied by his firm, they used to send out to sea the whole of the refuse from the heating and puddling furnaces, at a cost of something like 1/- per ton. At the present time, they were actually raising the whole of the steam required from about 12 furnaces fired with the waste products, and thus saving, practically, thousands of pounds per annum.

Another instance which he might mention was that of Newton Chambers & Co., Sheffield, where there were nearly 40 of these furnaces for burning coke refuse, &c. From recent practice, however, they had found that forced draught appliances were applicable to textile and other manufactories, as had been testified to by Mr. Marshall. From that gentleman's remarks it was apparent that by forced draught not only more steam with inferior fuel could be raised but at a much less price. Recently in Yorkshire they had put down several installations, and notwithstanding that coal there could be got cheaply, an economy of 50 % had been obtained.

Under such circumstances he felt convinced that cheap fuels could be turned to great advantage. It should also be borne in mind that these cheap fuels contained, in many cases, quite as great a calorific value as the better quality, and that their cheapness was simply due to their smallness, and to the fact of not being combustible with an ordinary chimney draught. A forced draught, however, permeated the small particles, and thus rendered it as advantageous as the dearer fuel.

Mr. Thomas Settle said that the remarks of Mr. Meldrum were interesting. He supposed forced draught was becoming widely adopted in marine boilers, but he was unaware of them burning inferior fuel in the Navy, generally the best fuel being considered the cheapest.

Mr. James Bolas said, although testing the efficiency of steam engines in connection with boilers was somewhat foreign to the subject of the paper under discussion, this matter had such interest for engineers, that he was not surprised that some of the speakers had referred to it, and had insisted on the necessity of separating the efficiency of the boiler from that of the engine. Now in this separation they were faced with a difficulty which would require a proper appreciation before, in any such trial, the true efficiency of each could be apportioned. This difficulty was the amount that should be added to the apparent efficiency of the engine, and deducted from the apparent efficiency of the boiler, due to the condition of the steam as it left the latter. He referred to the amount of water carried away by the steam, or to the amount of priming.

It was evident that a boiler which was priming badly would show a remarkable efficiency if a unit was taken which consisted solely of the cost of evaporating 1,000 gallons of water into steam. If they corrected this value and reduced it to a quantity representing, say the cost of producing lbs. of dry steam, even this did not afford a true measure of the boiler efficiency when tested in connection with an engine; for although they might make a correction in their estimate of boiler efficiency, and reduce the evaporation to lbs. of dry steam from and at 212° Fahr., the fact remained that this excess of moisture was still

present in the steam, and would have a most injurious effect on the economy and efficiency of the engine. Hence it would appear that any priming shown, when the condition of the steam was tested, should be debited against the boiler in a compound ratio, as it not only increased the apparent efficiency of the boiler but decreased the efficiency of the engine to a very great extent.

An excellent example of results which might have led to erroneous conclusions, had not care been taken to allow for excessive priming, occurred in the report of the trial made on the engines and boilers of the s.s. "Tartar," by the Research Committee on Marine-Engine Trials, appointed by the Institution of Mechanical Engineers.

In this trial (made in 1890) the efficiency of the boilers appeared to be unusually high, and this efficiency of the boilers was accompanied by an unusual want of economy in the engines. Fortunately, the particulars taken were sufficiently complete to enable it to be positively stated that the whole of the water pumped into the boilers was not turned into steam. It was proved by analysis of samples of the chimney gases taken at the trial, that 31·6lbs. of dry air were consumed per lb. of coal burnt, and that the total amount of furnace gases consumed was about 32·6lbs. per lb. of fuel; to raise these gases to the chimney temperature would absorb 22% of the whole calorific value of the fuel, and when taking into account the loss by radiation the total losses were such that the efficiency of the boiler could not have been over 70%; this was not above 83% of the apparent evaporative efficiency of the boiler, the excess being due to water carried from the boiler with the steam, and materially affecting the diagrams taken from the engines.

Respecting the remarks made by a previous speaker that forced draught was in use on marine boilers, and that the best steam coal only was burnt, inferring that marine engineers would use inferior fuel if any economy was to be obtained thereby. It should be borne in mind that on board ship every ton of coal burnt would have to be carried, and formed a part of the cargo. It was thus imperative that the best fuel obtainable should be used on account of its less bulk, giving a greater available space for cargo, and so increasing the earning power of the ship.

Mr. F. Schliffer, referring to the disuse of the mechanical stokers at Peel Mills, said he was informed by the manager that the cost of keeping them going was excessive. After reverting to hand firing two of the boilers were run off, and a fireman less was required. Practically, the only advantage mechanical stokers had over hand firing was that less smoke was generated when the firing was easy, but when the boilers were forced the full duty could not be obtained. From recent experience he had come to the conclusion that whenever a high evaporative duty was required from a boiler mechanical stokers were inapplicable.

As regards forced draught he was aware of a case where in a range of boilers, by its adoption, they not only had not to put another boiler down but one less had been used, which implied the saving of the cost of a boiler, and also the re-arrangement of a set of boilers. This amply demonstrated the economy due to the application of forced draught.

Mr. H. Hodgson thought that the temperature of the feed water, after passing through the economiser (215°), was exceedingly low for an economiser of 800 pipes. He was under the impression that the cost for oil, waste, gauge glasses, &c., was terribly great, and required some explanation.

The tables quoted by Mr. Nasmith of the consumption per thousand spindles in Oldham mills required further information before they were of any value.

As regards the reference which had been made to the adoption of forced draught, he might say that he had applied Meldrum's furnaces to their boilers with satisfactory results. They burnt coke-breeze almost exclusively, and when there was a little greater demand for steam, say during blowing, they mixed with it a little inferior dust fuel. Although they now burned twice the weight of fuel than previously, it was at considerably less than half the cost, so that eventually they would be the gainers by the new departure. Of course, there was a great amount of flue dust. Notwithstanding this drawback, however, he could certainly say that his experience with the furnaces was that they were an unqualified success.

Mr. SAMUEL BOSWELL wrote expressing his regret at not being able to attend. From what he had seen of the advanced copy of the paper he was of opinion that it was one of the most useful productions ever placed before the Association.

It was not only valuable on account of the great number of debatable points it contained, but also on account of the masterly manner in which those points had been valued and located; and if no debate had been possible by the members, the paper itself showed how the conclusions had been arrived at, and mapped out a course for any member to follow at his leisure or as his own inclination suggested. There was no doubt whatever, that in the search for economy the proper place to start was where the coal was being consumed and steam generated.

Engine trials were of a secondary character only, when boiler trials had not been made first, and the latter were far more valuable when every item of expenditure in connection with the boilers was taken into account.

The fierce battles at present raging between forced draught and natural draught, and between hand versus machine firing, were perplexing the minds of many engineers and steam users, but he (Mr. Boswell) thought that a careful perusal of the paper would show that each appliance must have its own conditions before it could become a success, and what was possible at one works was quite out of the question at another. This of course accounted for so many changes being made in boiler appliances, such as mechanical stokers, forced and assisted draughts, &c., in many cases after considerable expense. A valuable feature Mr. Boswell saw in the paper, was that it was pure and untainted so far as recommendations to adopt patents were concerned. The author laid the whole thing bare, and if there was one place more than another where complete experiments could be carried out it was where Mr. Holliday had been investigating. It had been Mr. Boswell's good fortune to visit and carefully note their mode of working and keeping, and it always appeared to him to be a good illustration of the motto "everything needful for economy and efficiency, but nothing to waste." It was somewhat to be regretted that the paper was compiled in connection with a works where the steam used was

somewhat difficult to follow, and utilized in engines of various sizes and for various purposes; in some cases where the dryness of the steam was not of vital importance. Still he considered that a Lancashire cotton spinner would find much to his advantage in a careful perusal, as Mr. Holliday had pointed out the goal, and it was for each to arrive at it by such means as his business lines would permit.

Mr. Thomas Ashbury (past-President), in a few appropriate words, proposed a vote of thanks to the author for the able and careful manner in which he had submitted his paper to the Association.

Mr. R. R. Lister seconded the motion, which was carried unanimously.

Mr. Holliday, in replying, sincerely thanked the members for the kind reception they had given him and his paper. He felt that in coming to Manchester to speak on the working of Lancashire boilers he would seem to be "carrying coals to Newcastle," but he was there in the capacity of a disciple coming back to the chief teacher with the results of what he had accomplished so far, and asking for comments on what had been done, and guidance for the future. It was a source of considerable satisfaction to him that the paper had elicited a lively discussion, and he hoped that it would be the means of directing attention to the possibilities of still further reducing the cost of steam, even in places where fuel is comparatively cheap; personally, he could not help envying Lancashire men their advantages, as compared with himself, of good and cheap fuel ready to their hands. Perhaps the experience of some of them during the recent coal strike would enable them to sympathise with him in having to pay so much for fuel. It was apparent from the discussion that Lancashire engineers still preferred to express the consumption of their engines in lbs. of coal per HP per hour; the difficulties and fallacies of such a method had been pointed out by Mr. Nasmith, and he would only remind them that they did not put lbs. of coal into the cylinders of their steam engines, an impression often conveyed to his mind by the expression lbs. of coal per HP per hour.

This method of expressing steam engine economy was, in his opinion, not only merely indefinite but was actually misleading, and tended to perpetuate another fallacy, "that the best was always the cheapest." This is certainly not the case with fuel, and he looked forward to a time, he hoped not far distant, when fuel for steam raising would be bought and sold at prices governed by its heat value, as determined by direct experiment. In all colliery districts there were large heaps of valuable material put aside as useless, in some cases even considerable expense was incurred in removing it, and it was to the interest, not only of coal owners and steam users but also of the whole community, to see that this portion of the country's national wealth was not squandered.

He had purposely raised the question of gas firing for his own information, and begged to return his hearty thanks to those gentlemen who had related their experiences and opinions on the subject.

He quite agreed with Mr. Saxon that the paper would have been of more interest to Lancashire men had it dealt with the boilers of one of their large spinning mills, and he had hoped that the paper would have elicited from members sufficient information to give a general idea, possibly on the lines of the paper, of the cost of steam raising in the best Lancashire practice. Higher or lower steam pressure affects the question but slightly, and as far as the cost of the fuel is concerned the necessary correction is easily applied. The figure 4·464 used in determining the cost of evaporating one thousand gallons of water is no empirical figure, but merely the quotient obtained by dividing 10,000 (1,000 gallons = 10,000lbs.) by 2,240, the number of lbs. in a ton, and the formula may be more fully expressed thus :—

Cost of evaporating 1,000 gallons of water =

$$\frac{1{,}000 \times 10 \times \text{cost of fuel per ton}}{2{,}240 \times \text{lbs. of water evaporated per lb. of fuel.}}$$

The question of more or less frequent cleaning of the flues was of great importance, and much attention had been given so as to secure the largest possible amount of work being done by each boiler before it was cleaned. By using a pyrometer where

the boiler flue entered the main flue the temperature of the gases could be observed, and it is remarkable that the increase in the temperature of the gases was comparatively very sudden, and this sudden increase in temperature well indicates that the flues require to be cleaned, and moreover the periods thus determined experimentally are found to agree well with one another, and what previous experience has shown to be necessary.

He could quite agree with Mr. Hartley that mechanical stokers did not always prove the success their inventors and makers promised them to be; his own experience was that for light work, or for extremely steady work at fairly heavy rates they were satisfactory, but where sudden and heavy demands for steam had to be met it was generally necessary to assist them by hand firing, and the labour thus entailed was greater than that of firing a furnace especially designed for hand firing.

In order to arrive at the cost of steam for one I. HP per hour the following rates of steam consumption might be assumed :—

30lbs.	per I. HP	per hour	for	single cylinder condensing engine.
20lbs.	,,	,,	,,	the average compound engine.
15lbs.	,,	,,	,,	the best practice.

Then the cost of steam would be approximately 0·3, 0·2, and 0·15 pence per I. HP per hour when working 150 hours per week, as in the paper; for a 50 hours' week the cost per hour would be more, on account of the losses by radiation during the idle time, perhaps 0·4, 0·3 and 0·2 pence, or say £4. 6s. 8d., £3. 5s. 0d., and £2. 3s. 4d. per annum for steam alone, according to the efficiency of the engines and the length and condition of the steam pipes between them and the boilers.

Mr. Taylor evidently misunderstood the object of the paper, which had been written, as already stated, not with any desire to teach but in order to draw out the experience of those who, like Mr. Taylor, should be so well acquainted with the virtue and vices, including the extravagances of the Lancashire boiler. The remark on page 120 of the paper to which Mr. Taylor refers is, as he will see on reference to it, merely a definition of the term—full calorific value of the fuel. The quantity of flue dust is due to the action of the forced draught, and the reason why so much is allowed to collect in the flues is fully detailed

in the paper. He agreed with Mr. Taylor that the charge for water was small, but invited Mr. Taylor to remember that in Ireland they had plenty of water, one of the very few things that are plentiful in that distressed country.

He had already expressed his concurrence in Mr. Nasmith's view of the method of treating steam engine consumption, and regretted that he could not, for want of special knowledge, follow him in the figures he had quoted. He thanked Mr. Nasmith again for the benefit of his experience in the use of gaseous fuel for steam boilers.

He congratulated Mr. Marshall on the success that had awarded his enterprise in putting down forced draught plant which had given results so satisfactory as those he quoted.

Mr. Meldrum, as a specialist in the use of inferior fuels, had been able to put before the meeting figures that might at first seem surprising, but he was able to confirm what Mr. Meldrum had said from his own experience, especially as regards the equality, in calorific value, of small fuels with large in very many cases.

He considered that what had fallen from Mr. Bolas as regards priming was of the highest importance, and quite agreed that the value of the trials carried out by the Research Committee on Marine Engine trials, appointed by the Institute of Mechanical Engineers, was much impaired by the absence of exact determinations of the losses due to priming. With further reference to the general question of forced draught, he might mention that he frequently made chemical analysis of the products of combustion in various furnaces, and had found that with forced draught it was possible to use as little as 17lbs. of air per lb. of good coal with complete combustion, whilst with natural draught not less than 20lbs. would be required; it was to this most probably that some of the superiority of forced over natural draught was to be attributed apart, of course, from the question of the use of cheaper fuels. To Mr. Ashbury and Mr. Lister, and to the members generally, he returned his hearty thanks, and he was especially grateful to the President for the kind way he had kept him in hand and "notched" him up when he was inclined to overrun himself. In conclusion, he hoped that he should renew the acquaintance of many of the members in Ireland, where he assured them they would find a hearty Irish welcome.

Diagram.

YORK
ARY
ASTOR, LENOX AND
TILDEN FOUNDATIONS
R L

THE MODERN DEVELOPMENT OF THE GAS ENGINE.

READ SATURDAY, 10TH NOVEMBER, 1894,

BY

Mr. JAS. ATKINSON, M.I.Mech.E.,

MANCHESTER.

The Gas Engine is now such an important means of obtaining motive power, that a great amount of time and attention has been paid to its development, with the result that it is a very different machine from what it was some fourteen years ago. It is to be understood that the scope of this paper is entirely confined to what are known as Compression Gas Engines, of the type first introduced by Dr. Otto in his celebrated invention, which was practically the 'beginning of the gas engine as a sound commercial every-day article.

In Plate 1 there are three diagrams given, all drawn to the same scale of 120lbs. to the inch.

Fig. 1 is a diagram taken from Dugald Clerk's book on the gas engine. It has been selected as a diagram fairly representing the gas engine of say some twelve years ago.

Fig. 2 is a diagram taken from the *Society of Arts Journal*, from an engine made by Messrs. Crossley Brothers, and tested at the Society of Arts trial of gas engines in 1888. This diagram may be taken as representing another epoch in the development of gas engines.

Fig. 3 is a diagram recently taken at Messrs. Crossley Brothers' works, and represents the most modern development of the gas engine.

Fig. 1, Plate 1, has a mean pressure of 71·8lbs., probably a higher mean pressure than was common at that time. The gas consumed per indicated HP was 19·4 cubic feet; per brake

HP 28 cubic feet. In those days, gas engines had slides for the admission of the charge and for the ignition, hence it will be seen that the compression pressure of 40lbs. is much lower than is common at present; the initial pressure of 170lbs. being also correspondingly lower. In other respects it is an excellent diagram. It is, however, obvious that there is some error in the gas consumption per indicated HP, the difference between 19 and 28 being certainly much too great. As brake HP can be taken with very great accuracy, and indicated HP with a gas engine is always somewhat doubtful, it would be perhaps as well to take, as is mainly done throughout this paper, comparative trials upon the brake HP only. The gas used in this instance was Glasgow gas, which is considerably richer than either Openshaw or London gas, and the 28 cubic feet per brake HP is a better result than if the test had been made with either of the two latter mentioned kinds of gas.

Fig. 2 shows a great improvement, the gas per brake HP being brought down to 23·87. The mean pressure is a little lower, this being probably partly due to the fact, that it was taken during a full power trial extending over six hours. The improvement, doubtless, is principally owing to the introduction of the hot tube ignition, which permits of a higher compression pressure being used, a correspondingly higher initial pressure being obtained, and sundry minor improvements. It is interesting to note that on this trial the proportion of heat units converted into indicated HP was 22·1 % of the total heat units in the gas used in the engine.

Diagrams Figs. 1 and 2 were taken from engines working on the ordinary recognised "Otto" cycle; that is to say, an outward working stroke followed by an inward exhaust stroke, leaving a chamber of considerable capacity at the inner end of the cylinder filled with burnt gases; then an outward suction stroke, drawing in fresh air and gas, the residuum left in from the previous revolution being still in the cylinder, and then final compression of the contents of the cylinder including this residuum. Ignition taking place, the cycle is repeated.

Fig. 3 shows a greatly increased mean pressure, viz. 98·75lbs. and a greatly increased economy, viz. 16·487 cubic feet per brake horse-power per hour. The means by which this latter

result has been obtained will be the principal object of this paper.

Plate 2 gives diagrammatical illustrations of an engine invented and patented by the author in 1885. It was commonly known as the "Differential" engine. This engine embodied some novel features, and from a theoretical point of view, is probably as perfect a gas engine as has ever been made. From a mechanical point however it was not so good. An explanation of it will enable us to understand some important points in connection with gas engines.

Fig. 1 shows the engine in the position ready for ignition, the charge being compressed between the two pistons as shown, the left-hand piston being just on the point of opening a communication to the ignition tube. Ignition takes place at the point of the revolution shown in the diagram, causing work to be done on the crank during about a quarter of a revolution, the left-hand piston meanwhile remaining almost stationary, and the right-hand piston doing the work. This brings the engine into the position shown in Fig. 2. As the crank continues to revolve, it will be seen that the right-hand piston passes an opening to a self-acting exhaust valve; the left-hand piston then moves rapidly towards it, driving out the burnt contents, until the position shown in Fig. 3 is attained. At this time the pistons are almost touching each other, the whole of the burnt gases being driven out. From the position shown in Fig. 3 to that shown in Fig. 4., the suction stroke is made, the gas and air forming the explosive mixture being drawn in through a self-acting valve. The position of the pistons at this time is such that when the right-hand piston has moved slightly to the left so as to close the admission port, a space between the two pistons is filled with a pure mixture of gas without there being any residuum intermingled. It will be seen that the space enclosed between the pistons in Fig. 4 is considerably less than the space between them shown in Fig. 2 at the end of the working portion of the revolution, the object of this being to continue the expansion of the ignited gases beyond their original volume before compression.

The engine thus presented four novel features, an ignition per revolution, the elimination of the burnt gases, expansion to

a greater volume than the original volume, also perfectly automatic valves and means of timing the ignition. Notwithstanding its mechanical deficiencies a brake horse power was obtained with these engines for a consumption of gas varying from 26 cubic feet with a 2 HP to about 24 cubic feet in the larger sizes, and at that time it was doubtless the most economical gas engine made. The Jurors of the Inventions Exhibition held in London in 1885 awarded this engine a Gold Medal.

Its mechanical imperfections however were so obvious, that its manufacture was given up for the engine shown diagramatically in Plate 3, known as the "Cycle" engine. The position of the moving parts of the engine are shown in the Figs. 1, 2, 3. and 4, and correspond to the positions of the "Differential" engine shown in Figs. 1, 2, 3, and 4, Plate 2. The "Cycle" gas engine was almost identical with the "Differential" engine from a theoretical point of view, possessing all the advantages excepting that, the valves had to be mechanically controlled and the ignition was not automatically timed. Its consumption was probably about the same as the "Differential" per indicated HP but per brake HP it was considerably better. The diagram given on Plate 3 was taken from the *Society of Arts Journal* at the same trial mentioned in connection with Fig 2, Plate 1. A considerable number of these engines have been made, many of them still being satisfactorily at work. Having a gas consumption of only 22 cubic feet per brake HP they were the most economical engines then made. Unfortunately, however, from a mechanical point of view they were still a long way behind, the number of joints being excessive, and the number of moving parts being more numerous than an ordinary engine; wear and tear was consequently greater and more lubrication required. There is something about the sweet simplicity of an ordinary connecting rod and crank which recommends itself to every engineer, a feature seriously wanting in both the "Differential" engine and the "Cycle." It should, however, be understood that at the time these engines were placed on the market the "Otto" patent was still in force in England, and they were probably the only ones made which did not conflict with that patent; and, as a consequence, they had a certain commercial value which was depreciated by the expiration of the "Otto" patent.

We now come to the means by which the diagram shown in Fig. 8, Plate 1, has been attained. Broadly speaking, the improvement is made by getting rid of the burnt gases left in the cylinder at the end of the exhaust stroke.

In Plate 7, a diagram is given, showing certain positions of the crank pin. Assuming the crank to be in the position "A" at the time the exhaust valve opens, towards the termination of a working stroke, the exhaust valve is kept open until position "B" is reached. The exhaust valve in an ordinary "Otto" engine would be closed about the point "C" when the crank is at the inner end and at the termination of the exhaust stroke; in the improved engine however it is not closed until the point "B" is reached. Also in an ordinary "Otto" engine the admission valve would be opened at about the point "C," but in the improved engine it is opened at the point "D." It will thus be seen that for a quarter of a revolution the air valve and the exhaust valve are both open at the same time. The improved engine is fitted up with a long exhaust pipe, an average length of about 65ft. being found to be the most suitable. When the exhaust valve is opened at "A" there is some 30 to 40lbs. pressure in the cylinder. The energy stored up in this cylinder full of hot gases is utilised in putting in motion a long column of exhaust gases in the exhaust pipe. Therefore, when the piston commences to slow down, after the middle of the exhaust stroke, the column of gases being in motion, causes a reduction of pressure in the cylinder, the reduction being accentuated during the time the crank is passing from the position "D" to the positon "B" when there is a partial vacuum in the cylinder. Fig. 1, Plate 6, illustrates a weak spring diagram taken so as to show the exhaust and suction lines clearly. Both the admission valve and the exhaust valve being open at this time, a strong current of air is drawn through the end of the cylinder, sweeping out the burnt products and replacing them with pure air. It is necessary to so shape the end of the cylinder that the burnt gases are completely swept out; a suitable form being shown on Plates 4 and 5, which will explain themselves. As soon as the burnt gases are replaced by pure air the gas valve is

also opened, and an explosive mixture is drawn in during the suction stroke, the cylinder being thus filled entirely with pure air and combustible gases. The effect of this is seen clearly in the diagram shown in Fig. 3, Plate 1, which has a mean pressure of 98·75lbs., and bringing the consumption of gas per brake HP per hour down to 16·487 cubic feet. This is an enormous reduction, being the greatest that has ever been made by any single improvement in the gas engine. The invention is a joint one of Mr. F. W. Crossley and the writer of this paper, and patented by them.

Incidentally, there are other advantages in the improved engine. It is known that an ordinary type "Otto" engine, working for long periods at its maximum power, will not give as much power when it is thoroughly hot as shortly after it was started. In the improved engine, owing, probably, mainly to such a considerable volume of cold air being drawn through the combustion chamber, this engine continues to work as satisfactorily for any length of time as it did on starting. In some instances an engine has been allowed to run on a brake the whole day, and at the termination a brake test has been made which proved that the engine was giving as much power as at starting, and with as low a consumption of gas.

When engines are worked with weak gases, such as "Dowson" gas, trouble has sometimes been experienced when the gas has perhaps not been as rich as it ought to have been, owing either to unsuitable fuel being used, or the gas generator not being properly managed; the mixture being too uninflammable, gives poor diagrams, and often causes ignitions in the exhaust or air pipes. With the improved engine however, a greater quantity of gas per revolution can be got into the cylinder and satisfactorily burnt, giving higher mean pressures, and we may say complete immunity from the troubles above mentioned. Ignition also is made more certain and regular from there being no waste gases mixed with the explosive mixture. A diagram taken with "Dowson" gas is shown in Fig. 3, Plate 6. It is from a 30 nominal HP size, giving an indicated power of over 100.

At the first glance it would be supposed that the improved engine required to be more strongly constructed than an ordinary

"Otto" engine. This, however, is not the case, and to explain the reason Fig. 2, Plate 6, is given, also drawn to the same scale of 120lbs. to the inch. This diagram was obtained from an ordinary "Otto" engine of 7 HP, and will be seen to have a mean pressure of 128lbs., and a maximum pressure of 366lbs., thus showing a greater strain on the engine than the 280lbs., shown in Fig. 3, Plate 1. When gas engines are working unsatisfactorily, say with an ignition tube rather too cold, they occasionally miss igniting a charge. Sometimes this may go on for several revolutions, until finally a cold charge of pure gas and air is ignited, and an abnormally large diagram like this is given. As several charges have been drawn through without being ignited the cylinder, is cold, and the weight of gas and air enclosed is greater than if the engine were working normally, the consequence being that, under these circumstances it is possible to get a certain maximum strain which is the same for any engine, and this maximum strain is not affected by the improvements. It is, therefore, necessary to make all gas engines strong enough to stand this possibly heavy strain, so that though a higher initial pressure is obtained in the improved engine in regular work than in an ordinary engine, it is not necessary to strengthen any of the parts beyond what they would in any case require. The maximum possible strain is always proportional to the compression pressure.

In the Appendix particulars are given of a brake test made with one of the improved engines. The engine had been allowed to run on the full brake load for at least an hour before the actual test was taken; the actual test itself extending over 41 minutes. The diagram, Fig. 3, Plate 1, is the diagram "A" mentioned in the particulars of the test. On the trial, the time, the reading of the counter, and the negative pull on the brake were taken for every 50 feet registered by the meter, the misses being counted during the intervals. The gross load was a weight actually lifted and accurately known; the brake rope was carried round the wheel a sufficient number of times to make the negative pull a small amount, which can be accurately read from a widely marked spring balance.

This is a very satisfactory way of making a brake test of a gas engine, the accuracy of the test being doubtless correct to a

fraction of one per cent. By finding the number of revolutions with each certain quantity of gas, and keeping a practically constant load during the test, any errors or anything abnormal is discovered at once, whilst the test is being made. If you note the number of revolutions given for each 50 feet in the column headed "Difference," you will see that they are practically uniform. The indicated HP worked out from diagram "A," after allowing for the misses, was 46·45, the gas per indicated HP per hour being 14·177 cubic feet. As previously mentioned, it is not desirable to place too much reliance upon indicated HP with gas engines; the strain on the indicator is invariably severe, the temperature may affect the strength of the spring, and there is also considerable risk of a little grit in the indicator cylinder. In this instance every precaution was taken, and a practically new indicator used. The mechanical efficiency of the engine was 85·9 per cent. In this connection an incidental advantage of the new improved engine is demonstrated. We have previously seen that it is necessary to construct a gas engine with strengths in its working parts sufficient to accommodate a possible maximum, as shown in Fig. 2, Plate 6. It is commonly accepted by engineers that a steam engine has practically the same amount of friction when simply turning itself round, doing no work, as it has when doing its maximum duty. Experience has also shown that the same rule applies to gas engines. This being so, a gas engine of certain dimensions will require a certain amount of power to keep it moving at its normal speed. All additional power is practically effective or brake HP; consequently the greater the power this engine can be made to give out in regular work, the higher its mechanical efficiency will be.

If we assume that Openshaw gas has a thermal value of 640 units per cubic foot, the test showed that 28·26 % of the total units of heat in the gas were converted into indicated HP; some 6 % more than has ever been done before in a gas engine, and considerably more than twice as much as the percentage of heat utilised in the best modern steam engine of corresponding size out of the heat in the steam supplied to it.

Mr. Dugald Clerk recently made a test of a smaller improved engine of four nominal HP for the purpose of obtaining reliable

data for a revised edition of his book, and a brake HP was obtained for a little under 17½ cubic feet per hour, the increased amount being due to the engine being smaller.

It will be very instructive to compare the improved engine with the "Cycle" and "Differential" engines previously described. The greatest advantage these latter engines had was doubtless the absence of residual burnt gases in the working charge. This advantage is attained in the improved engine. The improved engine does not expand the charge beyond original volume before compression. In this direction it may be possible to obtain still further improvements, though this is somewhat doubtful. A rough trial has been made with an engine, closing the admission valve earlier, so as not to fill up the cylinder entirely at the end of the suction stroke. From an observation of Fig. 1, Plate 6, it will be seen that the compression line crosses the atmospheric line almost immediately after the return stroke commences, thus getting in the greatest possible weight of charge. From the experiment made there did not appear to be any economy by reducing this charge, though it must be admitted that the trial was not made as completely as it might have been. It is to be borne in mind that by increasing the expansion in this or any other way, a larger cylinder and engine per unit of power is required; consequently, the mechanical efficiency cannot possibly be as good, and from a commercial point of view it will be understood that cost of engine per unit of power is an important element. All things being considered, and bearing in mind the excellent result obtained it is very doubtful indeed if any material all-round gain can be made in this way. The pressure left in the cylinder at the end of the stroke in the improved engine is by no means wasted, seeing that it is employed in driving out the exhaust, and does the scavenging in the manner explained.

Attempts have frequently been made to attain the same results in "Otto" engines by other means. In some instances pumps have been employed to draw out the residual gases, or in other instances to pump fresh air through. Doubtless better results can be attained by these methods, but in the improved engine however there are no additional parts, and no increased cost in construction. Certainly the exhaust pipe is in many

instances longer than it otherwise would be. Taking an average case, it would probably be 20 to 30 feet longer, but the additional few feet of pipe necessary is not a large item. It is satisfactory to note that silencers, such as "Justice's," packed with gravel or quietening chambers, such as are commonly used, do not affect the result any more than they do with ordinary engines. From some tests which have been made on this point the gas consumption per brake HP was not increased in the slightest degree by the silencers. It is necessary that they should be placed at the end of the exhaust pipe, and that the pipe itself from the engine to the 65 feet, or whatever may be necessary in the particular case, shall be uniform, and not broken into by any larger chamber. Moderately sized pockets for collecting water, may be used without any disadvantage in any part of this pipe.

APPENDIX.

PARTICULARS OF BRAKE TEST.

Time.	Counter.	Difference.	Negative Pull.	Misses.	REMARKS.
0 . 0	24,042		11½		Diagram "A."
4 . 42	4,834	792	11	12	Less Gas.
9 . 20	5,631	797	12½	14	Diagram "B."
14 . 0	6,424	793	12½	11	Gross weight lifted 542lbs.
18 . 40	7,206	782	12½	7	
23 . 20	7,996	790	14	7	Readings taken at every 50 cubic feet of Gas.
27 . 0	8,786	790	14½	7	
31 . 38	9,579	793	14½	8	Circumference of Flywheel, including rope, 14·35.
36 . 18	30,366	787	13½	10	
41 . 0	1,161	795	13½	9	Height of Barometer 29·8 inches.
	7,119	7,119	10/130 / 13		

Total revolutions 7,119 ÷ 41 = 173·63 revolutions per minute.

$$542 - 13 = 529\text{lbs. net load.}$$

$$\frac{173{\cdot}63 \times 529 \times 14{\cdot}35}{33{,}000} = 39{\cdot}91 \text{ brake HP.}$$

$$50 \times 9 = 450 \text{ cubic feet of gas in 41 minutes.}$$

$$\frac{450 \times 60}{41} = 658{\cdot}5 \text{ cubic feet of gas in one hour.}$$

$$\frac{658{\cdot}5}{39{\cdot}91} = 16{\cdot}487 \text{ cubic feet per brake HP per hour.}$$

DISCUSSION.

The PRESIDENT (Mr. T. Daniels) said Mr. Atkinson had dealt with the subject very concisely. He had purposely left out all reference to the ancient history of the gas engine and confined himself to modern developments.

Mr. W. J. JENKINS, who was invited to open the discussion, said that in listening to Mr. Atkinson's paper he had been led to think of the policy of gas committees and gas companies as affecting the working of gas engines. In Manchester, and in many other towns, the policy adopted, resulted in people who consumed large quantities of gas having to pay the rates of their neighbours. This was done through the gas committees charging a large excess of profit on their gas, which excess was handed over to other committees in relief of the rates, and to carry out improvements. This was not a fair way of dealing with the thing, and it kept a considerable amount of engineering talent idle. If the price of gas were reduced 8d. or 9d. per thousand cubic feet, gas engines might be used for many other purposes, and the mains of the Corporation could be used with advantage for a large day consumption of gas. For one thing, the lowering of the price of gas might result in the adoption of electric lighting by means of gas engines over wide areas. It appeared that in London and other large places where the electric light had been more in vogue than it had been in Manchester, trouble had been experienced recently in consequence of people objecting to the starting of electric-lighting plants of large power in the centre of residential districts, and it seemed almost impossible for electricians, up to the present time, to transmit the current over long distances economically. Now, a great many people, and particularly those who had the interests of the gas industry at heart, looked with no favour on the extension of the centralised system in the middle of a town, and if gas was sold at a reasonable price, gas engines might be adopted for small central station plants to distribute the electricity over batches of short streets. Such a scheme had been worked out by Mr. Denny Lane, of Cork, who had gone

with great minuteness into the figures, and proved that for such work gas engines had advantages over steam engines. Mr. John West also, when president of this Association, had in his address* pointed out the great advantages of such a scheme. But all this, of course, was beside the questions raised in the paper. For many years he had taken much interest in the Atkinson gas engine, and he thought it would be admitted that there were in the jointing arrangements many wonderful features for getting so many strokes in one revolution. One naturally looked upon it as an arrangement which caused a good deal of friction, and brought about a low mechanical efficiency, but the beauty of the arrangement was so great that one could not but admire it. Great credit was due to Mr. Atkinson for dealing so fairly with the question, and pointing out the faults of his own designs. One thing that had struck him in listening to the paper was the very considerable increase in the compression pressure due to the adoption of the igniting tubes; it seemed that the pressure previous to ignition had gone up from 40 to 79 lbs. per square inch—that was to say, it had practically doubled. He would like Mr. Atkinson to say whether that compression had any detrimental effect on the mechanical efficiency of the gas engine when working at reduced powers. It would be noticed that the engine, the trial of which was given in the paper, was working at an explosion every two revolutions—there was not much more than one per cent. of misses—and that engine was, consequently, working at the best possible mechanical efficiency it could attain. It seemed to him that if, with the increased compression pressure half the explosions were missed, the result must be that the mechanical efficiency would be very considerably reduced, and it was quite possible that under those conditions the new engine might not be much more economical than the old type. This matter had been brought specially under his notice just recently by reading a paper by a German engineer named Lorenz on the efficiency of compressors, gas engines, and steam engines. Lorenz worked on the basis of the Pambour formula, which stated that the efficiency of an engine depended on a constant pressure, plus a factor representing the mechanical

* Transactions, 1890.

friction of the engine. In other words, if I represented the indicated HP, and E the effective HP, then $I = a + BE$; a and B being constants depending upon the type of the engine. Lorenz then estimated the efficiency of the ordinary gas engine, using the same constants as apply for the steam engine, and with those constants the mechanical efficiency of the gas engine did not come out much greater than 75 or 76%. That, he (Mr. Jenkins) thought, proved that the gas engine, with a mechanical efficiency of 86%, as a mechanical machine, was better than the steam engine. Not only was it better as a thermo-dynamical machine, but it was better mechanically also; and such improvements as those described that evening would make it a better commercial machine too. But all this could, of course, be nullified by the number of idle strokes, and on that point he would like the benefit of Mr. Atkinson's wide experience. As a user of gas engines he was glad to know that gas engines could now be driven with such a small quantity of gas. One point that was worth remembering was that when they reduced the quantity of gas required per indicated HP per hour they reduced also the possible margin of waste. One indicated HP for one hour represented the conversion of 2,568 units of heat into work; and 14½ cubic feet of gas per indicated HP per hour caused $14{\cdot}5 \times 640 = 9{,}280$ units of heat to be generated, which, after deducting the 2,568 units converted into work, left 6,712 units to be taken up by the cooling water, and blown into the atmosphere with the exhaust. With 20 cubic feet of gas per HP per hour—a very good result—the corresponding figures were 12,800 units generated, 2,568 used, and 10,232 units to be wasted in heating and exhaust; the waste in the latter case being more than the total heat generated in the former. He felt much indebted to Mr. Atkinson for his admirable paper.

Mr. S. Boswell said that as a steam-boiler maker he felt he must not make any damaging admission with regard to the superiority of gas over steam engines. But in any case he perceived that, as they had to make boilers both for gas engineers and electricians, there would still remain some little work for boiler makers. He had just had to do with the putting down of a nine HP Otto gas engine for driving an ammonia com-

pressor, and he very soon found out the effect of the very high compression in the cylinder, as it seemed to have a detrimental effect when added to the compression due to the ammonia compressor, so he had to do something to reduce it. The engine was now working far more economically than the one they had taken out. If Mr. Atkinson could assist them in any way to get rid of the compression without reducing the efficiency he would be conferring a favour.

Mr. H. Guthrie said he felt pleased at the improvements described in the paper; they struck him as being sound in every direction. As Mr. Atkinson simply described improvements and did not indulge in prophecy there was not much to discuss in the paper. There was one remark made by Mr. Jenkins to which he would like to refer. Mr. Jenkins seemed to doubt whether an engine working at half power would not lose in efficiency, but it appeared to him (Mr. Guthrie) that Mr. Atkinson met that point to a great extent when he said that when the engine was working without explosion strokes it was, of course, cooling. At the point at which Mr. Jenkins thought it would give uneconomical results it would really give more economical results, because it would draw in a heavier and purer charge.

Mr. David Fulton said Mr. Jenkins had anticipated him in his reference to the marked increase of compression. The first diagram showed 40lbs., the next 61, and the highest 79. And those increases of compression were all accompanied by reduction in the consumption of gas. Mr. Atkinson did not explain how that came about. Would he tell them what ratio existed between the increase of compression and the reduction in the consumption of gas per HP. The salient improvement recommended in the paper seemed to be the long exhaust pipe. No doubt, such a current as Mr. Atkinson referred to would be induced in this exhaust pipe by a pressure of 30 or 40lbs., but every inch of gas that escaped would reduce the pressure. Then, again, would the exhaust pipe always have to be straight? He might have to set down a gas engine in a place where he could not have a straight exhaust pipe. What effect would the naturally increased amount of friction from bends in the pipe have on his induced current? Might it not so retard the

current in the exhaust pipe as to fail to effect the purpose Mr. Atkinson had in view? Again, he thought Mr. Atkinson's figures were defective in this, that he did not show how the improved engine behaved under a light load and no load at all. As Mr. Jenkins had remarked, the tests given were those in which there was an explosion every time. He thought it was acknowledged among gas engineers, that the true economy of a gas engine was best shown when dealing with intermittent loads. It was also acknowledged, that there was a greater load thrown on the piston in expelling the air during the idle strokes, than in expelling the exhaust. Now, admitting this, might not the presence of the very long exhaust pipe increase the friction in the pumped-out air in getting away, and thus tend to throw still more load on the piston in expelling the air; and, if so, might not the engine thus lose the increase in efficiency that Mr. Atkinson claimed? Another point that suggested itself to his mind was this. Mr. Atkinson's object was to get rid of the residual products of combustion after the explosion, but might it not be that on the in-charging stroke he might draw from the exhaust pipe some of those residual products back into the cylinder, and in that way nullify what the exhaust pipe was intended to effect. In other words, the exhaust pipe might confine and bottle up products that would otherwise get away. Another point that occurred to him was this: Mr. Atkinson, in his anxiety to put his engine in its very best light before the members, said he got this improved machine, with all its increase of HP, without increasing the weight of the engine. The speaker could not see how that could be. Mr. Atkinson said that under ordinary circumstances you had to build a gas engine to stand not the ordinary working pressures but the maximum pressures—that was to say, you must have an engine much more powerful than was necessary to do the work—but his engine did not require anything of that kind, as it always worked up to the maximum pressure. He did not see how Mr. Atkinson did it. Were they to suppose that he never missed fire, and that none of those abnormal rises of pressure took place in his cylinder? He thought it was a little absurd, if Mr. Atkinson would pardon the use of the word, to say that you could do without a margin. He (Mr. Fulton) would hesitate to

use a boiler without a plentiful margin of safety, and in like manner, he thought Mr. Atkinson would hesitate to apply in practice, the theory put forward in his paper, that he would be content to do without any margin at all. If he worked his engine continuously up to such a very high pressure, he would subject the machine to such continuous fatigue that it would very soon break down. It was important that a large margin of safety should be allowed.

Mr. Alfred Saxon said that a slight error had been made during the discussion with reference to the compression pressures. Mr. Jenkins had stated that it varied from 40lbs. to 79lbs., whereas it would be seen, if all the diagrams were closely examined, to vary from 40lbs. to 90lbs. One other point had been touched upon, viz., the power developed in relation to the strains and stresses in the working of a gas engine. Mr. Atkinson's claim of being able to develop a greater power out of the improved gas engine than from one of the ordinary type seemed to him to be quite clear. In the construction of an engine of any type, the strength of the parts of the engine were designed to withstand safely the greatest strains that it was likely to be subjected. In Fig. 1, Plate 1, it would be noticed that there was an initial pressure of 170lbs., and in Fig. 2, Plate 6, one of 366lbs., assuming these two engines to be of the same size. The strength of both being designed to resist the biggest explosion or greatest initial pressure possible (it being, however, possible, as stated by Mr. Atkinson, to get under exceptional circumstances as great a pressure upon one as the other), it follows that the one working almost every effective stroke nearer the maximum strains than the other (yet not exceeding them) would develop a greater mean average pressure and be a more powerful engine than the other. With regard to another point that had been incidently referred to in the paper, he certainly did not think that the mechanical efficiency of a gas engine would equal that of a steam engine. Mr. Atkinson stated that with the engine of his own design he got a brake HP for a consumption of gas varying from 26 cubic feet with a two HP to about 24 cubic feet in the larger sizes. Now, many present who were in the habit of working large steam engines would

like to know whether that statement represented what the largest gas engines that were turned out were capable of doing. Were they more economical than the smaller sizes of gas engines, or were they more wasteful? He admired the candour with which Mr. Atkinson admitted the imperfections in his early engine; there was great force in his remarks that there was such a thing as adding parts to an engine that really caused it to be ineffective. It was very desirable that there should be simplicity in an engine of that sort, which had to be used, in many cases, by unskilled people. One very peculiar feature of the improved engine was the early opening and the late closing of the exhaust. Mr. Atkinson had certainly put his finger on the worst feature of the gas engine, viz., the difficulty of getting rid of the burned gases, and he was to be congratulated on the success he had attained in overcoming that difficulty.

Mr. John Craven said he was not prepared to discuss the technical points of the development of the gas engine, but could state from reliable date the results of working a 20 nominal HP Otto gas engine. This had been at work five years driving a separate department in Craven Bros.' works, which included a 15-ton rope-driven traveller, 50ft. span; 350ft. line shafting, and about forty machine tools of the ordinary description used in an engineer's shop. These were estimated to take 30 indicated HP. The gas was supplied by the Manchester Corporation and taken through a separate meter, and a daily record of the consumption was carefully taken, which showed an average consumption of 480 cubic feet per hour—say, for easy reckoning, 500 cubic feet, at a cost of 1s. 3d. per hour, equal to a halfpenny per indicated HP per hour. This cost would be greatly reduced by using gas made in a Dowson or other gas producing plant, as the price charged by the Manchester Corporation included the large profits handed over annually for City improvements, referred to by Mr. Jenkins. But, with this high price for gas as a motive power, it was in favour of the gas engine in the point of economy, when it must be taken into consideration there is no consumption of water worth speaking about, no stoker's wages, no overtime beyond the working hours of the engine, no flues to clean out, no ashes to cart away, no valuable space occupied by boiler,

coal, &c., and the workman who oils and cleans the gas engine was not fully occupied, and able to do other work.

Mr. CONSTANTINE said that the improvements in the gas engine, as sketched by Mr. Atkinson, were undoubtedly astonishing, if for no other reason than that they indicated that, in the last fourteen years, there had been effected a saving of something like 42% in the gas consumed per brake HP. He was quite prepared to admit that testing engines by the brake was the proper way of doing it, but if they would get at the commercial aspect of the matter, they must consider, as the last speaker had pointed out, the indicated HP, because you had not only to obtain the power that was transmitted to the machinery, but you had also to pay for the power to drive the engine itself. For small users gas engines had, in many cases, decided advantages, but they had also some disadvantages, and one of them was this. If a man was going to put down a small plant for the manufacture of any kind of article, if he thought that a gas engine, capable of developing seven or eight HP, was going to be sufficient for his purpose for several years, he was not going to put down an engine of much larger power; but if he found that business prospered with him, and he required more machinery, it really meant that, for the sake of an extra HP or half HP, he had often to throw out his engine and put in another. And, as they all knew, a second-hand gas engine when put on the market realized only a small percentage of its first cost. Another great disadvantage the gas engine laboured under (he was speaking of small powers), was that if anything went wrong with it, an expert or a specialist must be called in to put it in order, even if the defect was a small one. That and the limitation of power, of which he had already spoken, formed great drawbacks. With regard to gas engines with the tremendous initial pressure that had been referred to: he knew, as a matter of fact, that if you put down an engine to give, say 250 or 300 HP, the weight of the moving parts of that engine was something tremendous, as indeed it was bound to be, to stand the shock of such high initial pressures as had been given, and that, in his opinion, would seriously militate against the mechanical efficiency of the engine. They had been commonly

taught to believe that gas engines were going to supersede steam engines, and he quite believed they would in many cases, and deservedly so, too, in cases where only small power was required. But he was sanguine enough to believe that, with regard to large engines, steam engineers did not yet need to put on their coats and go home. It was interesting to compare the fuel cost per indicated HP of gas and steam engines.

Assuming the price of gas to be 2s. 6d. per 1.000 cubic feet, the cost in the best example of gas engine quoted in the paper worked out to ·435 pence per indicated HP per hour.

In small non-condensing steam engines consuming the liberal allowance of 40lbs. of water per indicated HP, with an evaporation of 8lbs. of water per lb. of coal, costing 15s. per ton (this being much above the average price in this district), the fuel cost was ·4 pence per indicated HP per hour.

In condensing and compound engines the difference was more marked, as in the best examples of compounds the consumption of water was as low as 16lbs. of water per indicated HP, but taking 20lbs. as an average, with the price of coal at 15s. as above, and an evaporation of 9lbs. of water per lb. of coal, the cost per indicated HP per hour was only ·178 pence, and this was still further reduced to ·12 pence per indicated HP in triple-expansion engines, consuming 14lbs. of water per indicated HP per hour.

He was, of course, aware that there were other factor, such as attendance, stores, cost of water, space, &c., to be taken into account; but, in spite of these considerations, either the price of gas must be very much lessened, or the engine improved to work with a smaller consumption before the gas engine could compete seriously with steam in cases were considerable power was required. In mills and works where steam was used for heating purposes, the gas engine was still further discounted.

The central fact in Mr. Atkinson's paper was the beautiful way in which the burned gases had been got rid of. He had very much pleasure in adding his quota of thanks to Mr. Atkinson for bringing before them such an interesting subject, and so ably treated, and personally he hoped that that would not be the last occasion on which the author would read a paper before that Association.

Mr. HIGGINSON wished to point out that Mr. Atkinson had not given sufficient data to show wherein lay the economy of the new method. He had supplied no heat balance sheet. so that it was impossible to say whether the economy lay in the greater development of heat in combustion, or in the reduction of losses in the jacket or exhaust. Mr. Atkinson gave no information as to clearance, so that they could not deduce the expansion factor. As far as he could judge Mr. Atkinson seemed to consider that the economy was caused by using a purer charge, that is less products of previous combustion being left in. If this were the sole cause of economy, then they might expect the same economy per indicated HP from any Otto engine working with a light load, firing say every second or third cycle. This, however, was not the case to any appreciable extent, and certainly the Society of Arts trials, from which Fig. 2 Plate 1 was taken, showed no such result. The differential and cycle engines were also worked with a pure charge, and seeing that they were so much more rapid in expansion they should have shown an even better result than the improved engine. It seemed to him that the most of the economy lay, as other speakers had pointed out, in the greater compression, and also in the greater size of cylinder used in the new engine under review compared with that tested in the Society of Arts trials. He was glad to welcome a man of Mr. Atkinson's standing in the gas engine world.

The PRESIDENT said that in bringing the discussion to a close he might tell them that in 1887 they put down at his firm's works a gas engine of 14 HP to drive a part of the machinery that was a long way from the boilers. It was used to drive about thirty machine tools cutting the ordinary material used in the construction of locomotives and engines. They felt, as steam-engine makers, that it was not quite the thing for them to be putting down a gas engine, but they ate the leek and put it down. And they did not regret their decision. The gas engine worked well and economically; and his experience was that the more you put on it the better it worked. But the explanation, perhaps, was that it used Salford gas. It cost them 1s. 1d. per hour. If he were called in as a consulting engineer to arrange for driving power for a locomotive works,

or machine works where there were separate bays, and it was necessary to work overtime, he would certainly have a gas engine put down in every bay in preference to a steam engine. For intermittent work, and work done in divisions, he thought gas engines were admirable. With gas engines you had no cleaning of boilers, you need not dread the smoke inspector, and there were many other advantages.

Mr. T. Ashbury proposed a vote of thanks to Mr. Atkinson for his paper. The paper and discussion, he said, had been exceedingly instructive. There was a great deal of truth in what had been said about the economy and convenience of using gas engines where you had to run certain machinery some distance away from the steam generating plant. He hoped that the reception Mr. Atkinson had met with might encourage him to come amongst them again. Those of them who were familiar with the exhibits at the Inventions Exhibition must have been struck with what one might almost call the stamp of genius on the engine Mr. Atkinson exhibited there. They were glad that Mr. Atkinson had now come to live in Manchester, and were proud also of the fact that the gas engine industry, if not centred in Manchester, had at all events received in Manchester its greatest impetus and achieved its greatest triumph.

The vote of thanks was heartily accorded.

Mr. Atkinson, in acknowledging the vote of thanks, replied to some of the remarks made in the course of the discussion. He said that Mr. Jenkins had referred to what was done by corporations owning gasworks keeping up the price of gas above its actual cost, and this had undoubtedly prejudicially affected the sale of gas engines. Gas companies, who should have been the earliest to adopt gas engines for their own use, had, with a few exceptions—and the gentleman he had named, Mr. Denny Lane, was one of the exceptions done little or nothing to assist gas-engine makers in overcoming the prejudices they had to contend with, in forcing gas engines into the public favour they now enjoyed; in fact, until recently, they seldom used them in their own works. Before coming to Manchester, and whilst he was in London, the British Gas Engine and Engineering Company,

Limited, sold a majority of their engines in London. He had frequently done business in other ways with the gas companies there, but could not sell them gas engines. He one day made a calculation of the gas used by engines they themselves had put down to work with gas from the mains of the Gas Light and Coke Company, and making as fair an allowance as possible, for the quantity likely to be consumed, he found that this Company was receiving in gas rental something like £12,000 per annum, and that, of course, entirely apart from the still greater number of engines from Messrs. Crossley and other makers. He laid this statement before Mr. Trewby, and was pleased to say that he received several orders from him afterwards. The gas companies, instead of being in the forefront in this matter, had really been most conservatively obstructive. Mr. Jenkins had referred to the mechanical efficiency with reduced powers, and also to the friction of steam engines. He (Mr Atkinson) thought that the most satisfactory data they had to go upon in this matter had been furnished by the experiments of Professor Thurston, of America, and that it was now pretty universally accepted that the friction of a steam engine was practically the same, no matter what power it was giving out. Doubtless the same applied to gas engines, as stated in his paper. A gas engine had to give a certain indicated HP to drive itself, and this amount represented a constant amount, or dead load; all the power indicated in excess of this was effective or useful load put into the work actually done. Supposing they had an engine capable of indicating, say, 100 HP, it would take, say, 15 HP to drive it at normal speed. If they wanted 85 HP effective, the engine would indicate 100: if they wanted 1 HP effective the engine would have to indicate 16. Some remarks had been made with reference to the ordinary and the improved Otto engines when possible working strokes were cut out by the governor so as to give idle strokes instead. He desired to say, in reply, that in the ordinary engine the gas per charge was so regulated that the most economical proportion was given for working strokes following each other without intervening idle strokes. If the engine missed an ordinary working stroke the cylinder would be cooler when the next working charge was drawn in; there was no residuum in the cylinder, and conse-

quently there was a greater weight of air in the charge, and the quantity of gas being the same, the mixture was too weak to give the most economical result. With the improved Otto the gas was proportioned for a larger quantity of air per unit size of cylinder, inasmuch as the quantity of air drawn in made the charge practically the same after idle revolutions as it would be after working revolutions. This was another advantage with the improved engine. Mr. Higginson referred to a table of heat balances of the new engine, but he (Mr. Atkinson) was sorry to say he had not yet had time to go thoroughly into the question as to where the balance of the heat went. He had little doubt, however, that the increased percentage of heat converted into work was mainly taken out of the exhaust losses. Doubtless, with all gas engines the combustion was not absolutely completed during the working stroke, this being so to a much greater extent when residuum was present than when pure air only was present, as in the improved engine, which consequently burned the gas more completely during the working stroke. With regard to what had been said by Mr. Guthrie and Mr. Jenkins as to the increase in compression, in Fig. 1, Plate 1, the compression pressure was only 40 lbs. per square inch. When gas engines had slides it was not desirable to increase, materially, beyond this 40 lbs., but when the slide was done away with and the tube ignition used there was no difficulty in working with higher pressures. To some extent, the higher the compression pressure the greater the economy, and to some extent the increased economy of the new engine was due to this higher compression pressure, though not to any very great extent. This would also answer some remarks made by Mr. Fulton. They would notice that the compression pressure of 90lbs. (Plate 6) was with a large 30 nominal HP engine, and was to work with Dowson gas. It had been found desirable with the ordinary Otto engine to work with a high compression pressure when using Dowson gas, and this being also a large engine accounted for the high compression pressure. It was not necessary to have the exhaust pipe straight. There might be any reasonable number of bends in it, so long as they were bends and not sharp elbows. With respect to expelling the air after idle strokes, when there had been no ignition in the cylinder, the slightly increased resistance

due to the greater length of pipe was practically inappreciable. Mr. Fulton apparently did not clearly understand his (Mr. Atkinson's) object in giving the diagram on Plate 6, but if he would read the paper again he would probably more clearly understand it. The point he desired to convey was that any engine, whether working as an ordinary Otto engine or as an improved Otto engine had a certain possible maximum initial strain, this maximum strain being proportionate to the compression pressure. In both cases this possible maximun strain was considerably greater than the working strains in either the ordinary or the improved Otto engine. It had to be provided for, and being provided for, the ordinary working strains were so much lower that there could be no undue strain of the working parts of the engine. Mr. Saxon's remarks with respect to the increased compression pressure had already been referred to. Mr. Saxon referred also to the economy of the larger engines. Broadly speaking, the larger the engine the greater the economy, up to a certain point. Beyond this point it was doubtful whether any reduction of gas took place with increase of size of cylinder, owing to the fact that the gas had not time to thoroughly burn out during the working stroke. This applied to the ordinary Otto type of engine. With respect to the improved type of engine, it had not yet been ascertained to what extent these remarks would apply, as it was very probable that the absence of residuum would insure the gas being rapidly and thorougly burned, and in all likelihood the increase in economy with increased size of cylinder would continue to a much greater increased size of cylinder in the improved engine. Mr. Saxon was not correct in crediting him (Mr. Atkinson) with having made this improvement in the Otto engine. The improvement was really effected by Mr. Crossley and himself jointly. With regard to high-speed engines for electric lighting, there was no reason why they should not be as economical as the ordinary-speeded gas engines. To make them really suitable for high speeds they required to be made stronger in the working parts, to have more bearing surface in the bearings, and more attention paid to balancing. He had that day seen some electric lights from a large engine constructed by Messrs. Crossley Brothers which were so steady that they could not have detected

MODERN DEVELOPMENT OF THE GAS ENGINE.

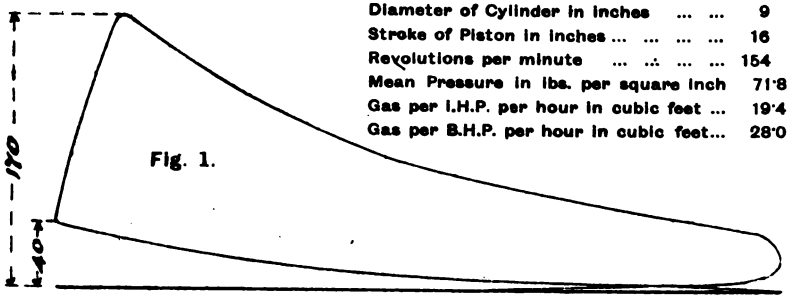

Fig. 1.

Diameter of Cylinder in inches	9
Stroke of Piston in inches	16
Revolutions per minute	154
Mean Pressure in lbs. per square inch	71·8
Gas per I.H.P. per hour in cubic feet ...	19·4
Gas per B.H.P. per hour in cubic feet...	28·0

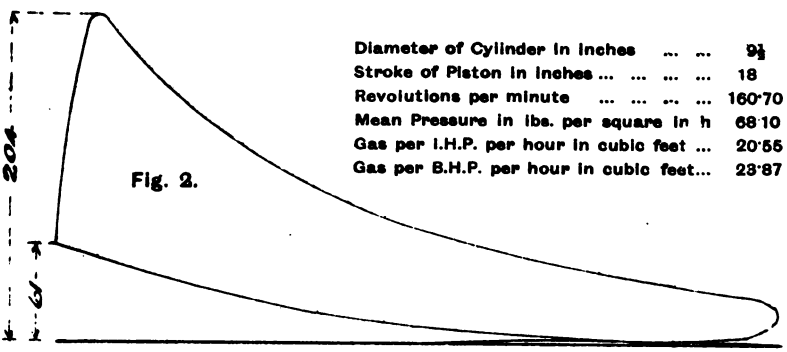

Fig. 2.

Diameter of Cylinder in inches	9½
Stroke of Piston in inches	18
Revolutions per minute	160·70
Mean Pressure in lbs. per square in h	68·10
Gas per I.H.P. per hour in cubic feet ...	20·55
Gas per B.H.P. per hour in cubic feet...	23·87

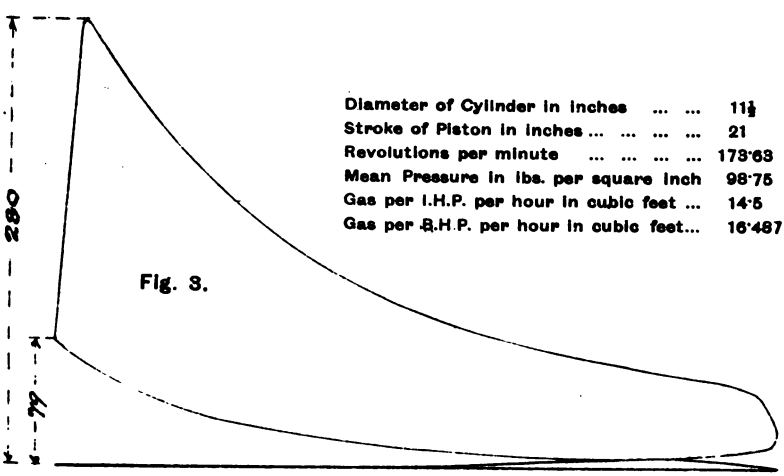

Fig. 3.

Diameter of Cylinder in inches	11½
Stroke of Piston in inches	21
Revolutions per minute	173·63
Mean Pressure in lbs. per square inch	98·75
Gas per I.H.P. per hour in cubic feet ...	14·5
Gas per B.H.P. per hour in cubic feet...	16·487

MANCHESTER ASSOCIATION OF ENGINEERS.

THE NEW YORK
PUBLIC LIBRARY

ASTOR, LENOX AND
TILDEN FOUNDATIONS
R L

MODERN DEVELOPMENT OF THE GAS ENGINE.

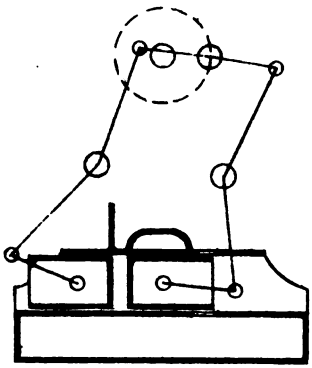

Fig. 1.

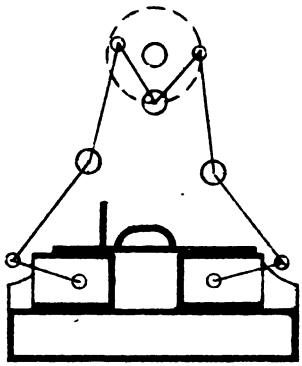

Fig. 2.

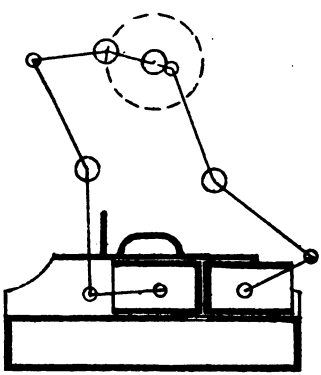

Fig. 3.

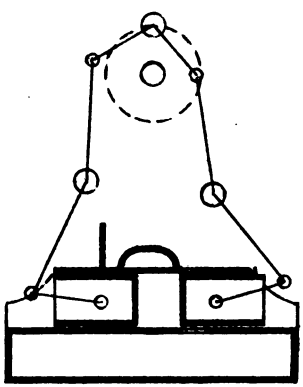

Fig. 4.

THE NEW YORK
PUBLIC LIBRARY

ASTOR, LENOX AND
TILDEN FOUNDATIONS
R L

MODERN DEVELOPMENT OF THE GAS ENGINE.

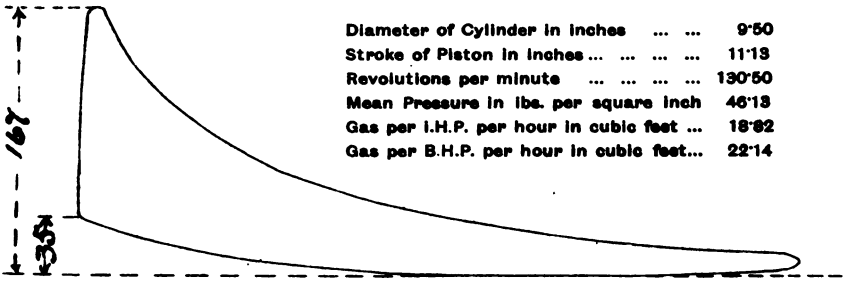

Diameter of Cylinder in inches	9·50
Stroke of Piston in inches	11·13
Revolutions per minute	130·50
Mean Pressure in lbs. per square inch	46·13
Gas per I.H.P. per hour in cubic feet ...	18·82
Gas per B.H.P. per hour in cubic feet...	22·14

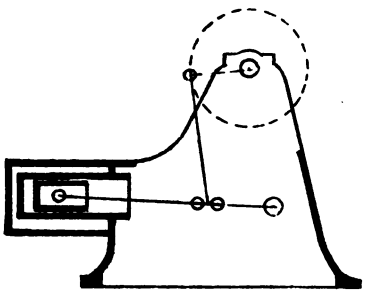

Fig. 1.

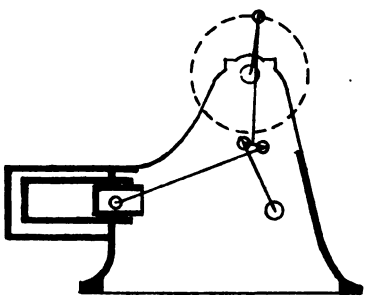

Fig. 2.

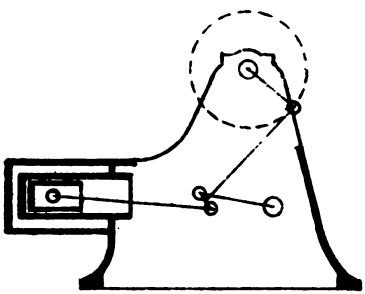

Fig. 3.

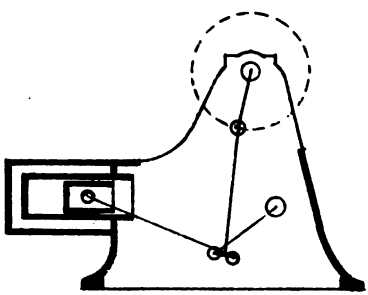

Fig. 4.

MANCHESTER ASSOCIATION OF ENGINEERS.

THE NEW YORK
PUBLIC LIBRARY

ASTOR, LENOX AND
TILDEN FOUNDATIONS
R L

MODERN DEVELOPMENT OF THE GAS ENGINE.

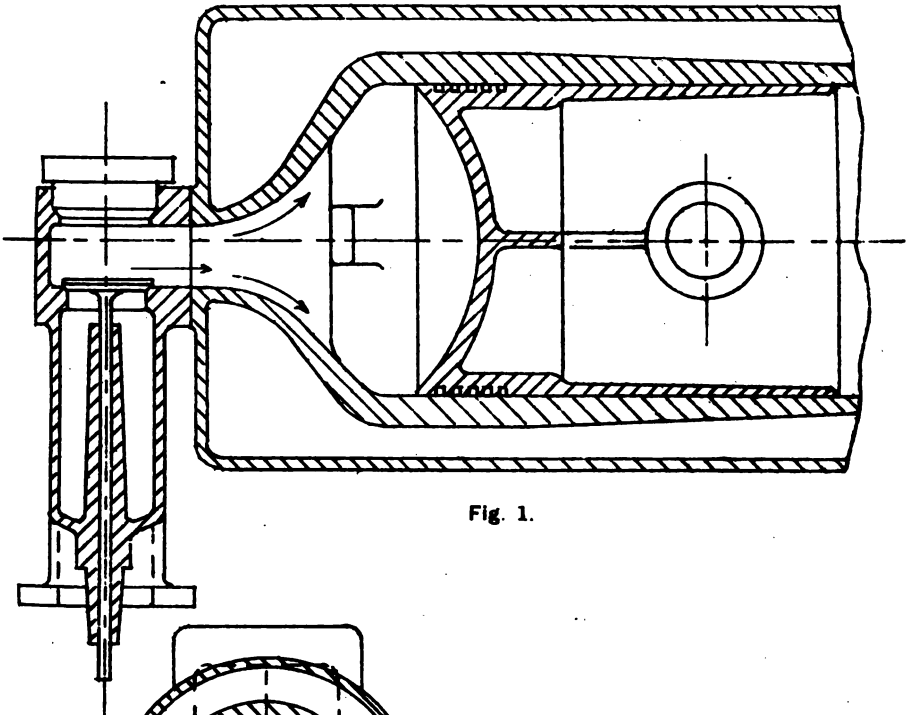

Fig. 1.

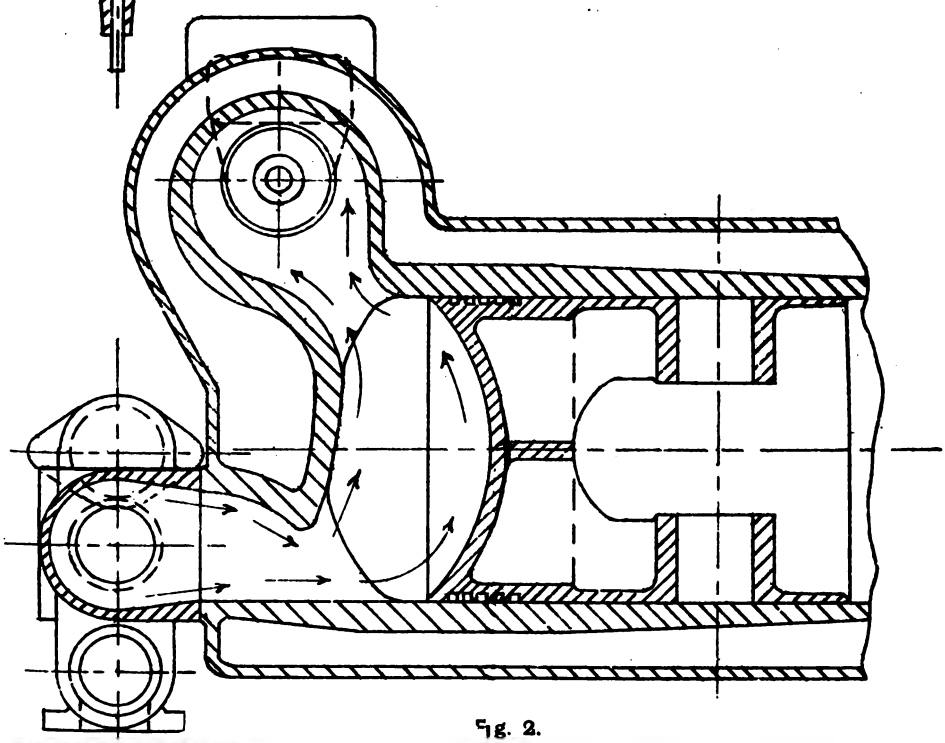

Fig. 2.

MANCHESTER ASSOCIATION OF ENGINEERS.

ORK
RY
ND
FOUNDATIONS
R L

MODERN DEVELOPMENT OF THE GAS ENGINE.

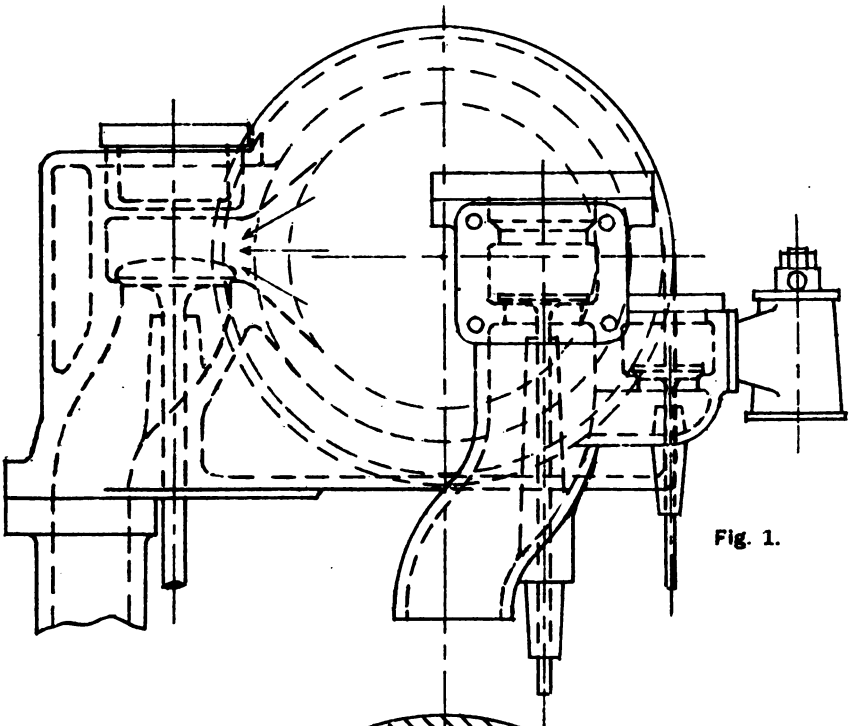

Fig. 1.

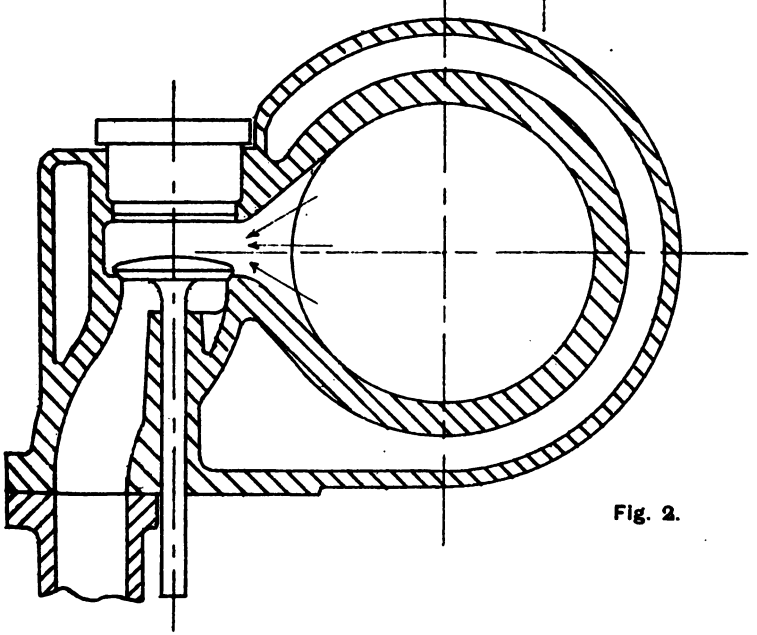

Fig. 2.

THE NEW YORK
RY

TILDEN FOUNDATIONS
R

MODERN DEVELOPMENT OF THE GAS ENGINE.

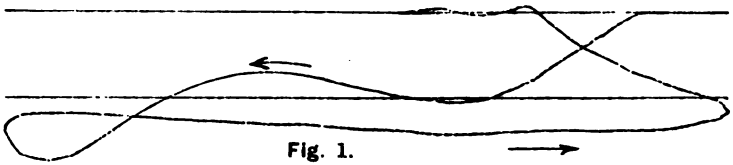

Fig. 1.

Scale, 8 lbs. to an inch.

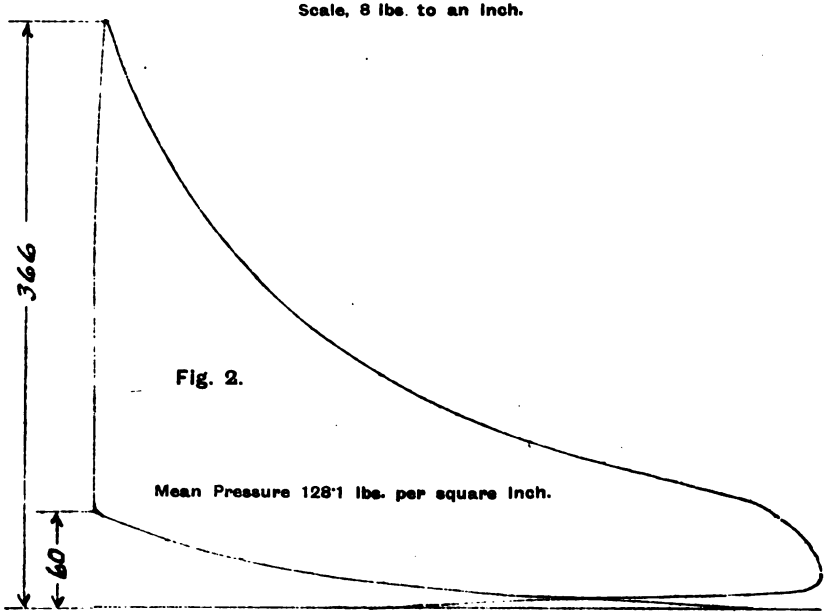

Fig. 2.

Mean Pressure 128·1 lbs. per square inch.

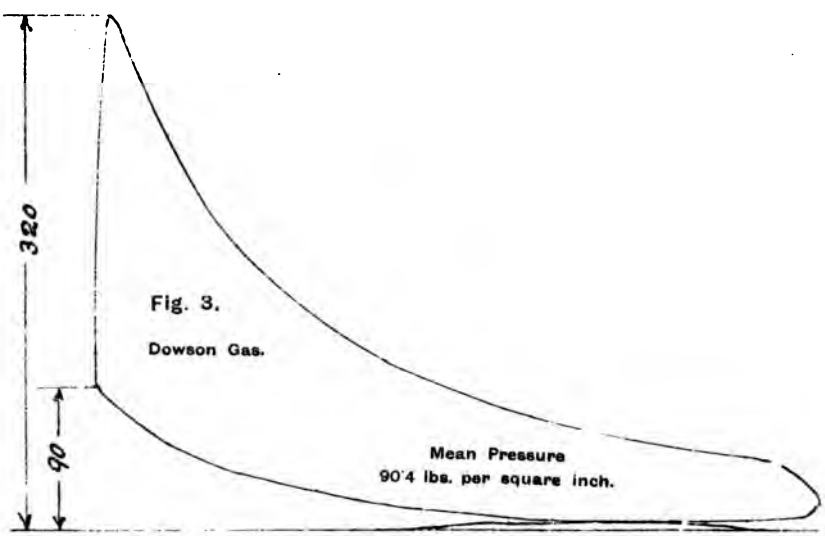

Fig. 3.

Dowson Gas.

Mean Pressure
90·4 lbs. per square inch.

ORK
RY
AND
TILDEN FOUNDATIONS
R L

MODERN DEVELOPMENT OF THE GAS ENGINE

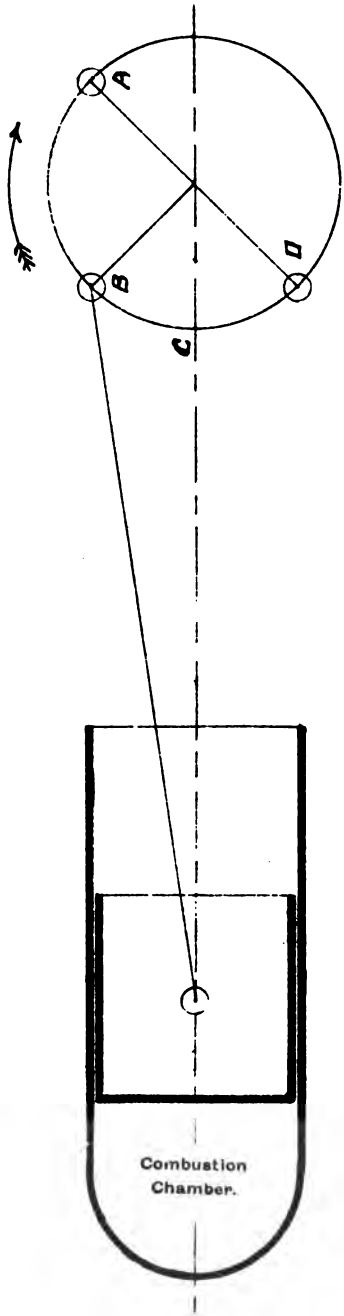

ORK
ARY
AND
FOUNDATIONS
K L

PREPAYMENT GAS METERS.

READ SATURDAY, 24TH NOVEMBER, 1894,

BY

MR. J. NASMITH,

MANCHESTER.

A few years ago it looked as if modern society would depend for all its comforts and conveniences upon some form of mechanism, to be set in operation by means of, or subsequent to, the introduction of some coin of the realm into a slot. The success of the weighing machines which were thus controlled set inventors in motion, and a long list of patents were taken for the delivery of nearly every commodity which can be sold for a penny. The early excitement has considerably cooled down, and the successful applications of this popular idea may be counted at present in units instead of tens. Admitting this to be the fact, however, the writer's researches into the matter have convinced him that the mechanism employed possesses an intrinsic interest, and that, when closely looked at, it is seen to be the result of a considerable amount of ingenuity and skill. This is one of the bye-ways of modern mechanics, but by following it, it will be found to contain many interesting features, a consideration of which will probably not be unprofitable.

The idea of automatically providing a supply of a given commodity by the employment of a coin is not in the strict sense modern. In the Pneumatics of Hero of Alexandria, who lived some 800 years prior to the Christian era, a device of this kind is found. The late Mr. Bennet Woodcroft translated the book, and an illustration of the device is given at Fig. 1. It will be seen that the mechanism consisted first of a lever mounted on a fulcum, and having at one end a broad palm, which came below a slot formed in the ornamental urn containing the mechanism. To the lever was attached a pendant

rod, terminating in a plunger, which worked in a cylinder constantly filled with water or other liquid, supplied from a reservoir in the body of the urn. Attached to the cylinder was an outlet pipe by which the liquid is conveyed outside the urn. The weight of one end of the lever and its attached parts was such that it kept the lever normally with the palm at its highest point. When a coin was dropped into the slot it fell upon the lever, and thus overcame the weight of the parts operating the plunger and delivering the liquid. This act caused the lever to assume such a position that the coin fell within the urn, where it remained.

It will be seen that this, the first coin-in-the-slot arrangement known to the writer, possesses in it all the chief characteristics of its modern descendants. It even lent itself, like some of them, to deception, for it is believed it was used by the priests as a means of extracting coins in exchange for a liquid assumed to possess magical powers. In one respect it has the advantage over modern machines. When the liquid was there it would deliver it, and we would not expect to have seen the melancholy sight of a youngster howling after the penny which was gone without any adequate equivalent having been delivered. This device is also notable, because the *modus operandi* was based on one of two types used to-day. It may be said generally that there are two main forms of prepayment mechanism used, namely, those in which the coin is used as a weight to overcome the counterpoise of a lever, or those in which the coin is employed as a gag piece between two parts of the mechanism, previously unseparated from each other. It will be found that all coin receiving mechanism is based upon one of the principles named, although in the particular application about to be considered the latter is the most common.

There is perhaps no application of the prepayment principle which is likely to be so useful as that relating to gas meters. It is very well known to gas managers, and in a less degree to most others, that there are large numbers of our fellow citizens who habitually burn candles or oil instead of gas. In Tunbridge Wells for instance, it is stated by Mr. Dougall, the manager at the local gas works, that out of 5,300 houses no less than 2,975 are using illuminants other than gas, principally oil. The

reason for this procedure is plain. If gas is used in the ordinary way it is paid for once a quarter, and the amount is felt to be a serious one by many of our poorer brethren. Further, many companies and corporations demand a deposit, which is levied at the beginning of the consumer's transaction with them, and which deposit is retained until consumption ceases. These two causes combined form a sufficiently serious tax to prevent many persons from using gas. Our past-president, Mr. West, in a recent address gave some figures which show the small number of gas consumers in large populations as compared with the possible number. The writer has added a column of the percentage of consumers to the total population, thus giving a measure which, though possibly not absolutely, is approximately accurate.

Town.	Population.	Number of Consumers. Actual.	Percentage.
Belfast	280,000	23,338	8·33
Bradford	186,000	51,760	27·83
Bristol	310,000	22,600	7·3
Carlisle	42,000	6,301	15
Glasgow	760,000	156,980	20·64
Ipswich	56,000	3,050	5·45
Leicester	180,000	25,041	13·91
Liverpool	614,000	76,500	12·46
Newcastle-on-Tyne	275,000	30,471	11·08
Nottingham	250,000	38,005	15·2

The number of consumers in Liverpool include 12,000 using prepayment meters. If, therefore, these be deducted, the percentage of consumers is reduced to 10·5, thus showing how possible it is to add largely to the number of consumers, if proper means are taken. The matter is urgent and of a certain importance, because there is an undoubted tendency in all large towns to adopt an electrical supply of light. It is very true that the use of the electric light is probably confined to those who are willing to pay a sum in excess of the cost of gas, but experience has shown that the public thus defined is a larger one than was at first expected. A brilliant illuminant, or a brilliant application of an illuminant, finds users in spite of cost, and this, it appears to the writer,

is the crux of the question. Users of the class named are mainly those who can afford to pay for their fancy and are large ones, and it is obvious that their place must be supplied by others. The extended employment of cooking stoves, and the provision of means by which those who have not hitherto been consumers may be induced to become so, are the two best lines of policy for the gas companies. It is not, however, the scope of this paper to educate gas managers in their business. They know more about this part of the subject than the writer, and it is enough to indicate the difficulties which are ahead of them, and thus show the need for the extended use of prepayment meters. At a later stage some of the steps adopted will be detailed, and it will be seen how much alive many of those concerned are to the grave consideration involved.

It may at first sight appear to be a very simple matter to devise a piece of mechanism by which a coin or token can be utilised as a means of operating delivery mechanism. Further experience, however, demonstrates the difficulty of this apparently simple task. In the first place the mechanism must be free from complication, as it is subject to handling by all and sundry, with the result which may be naturally expected. Then it is desirable for the same reason that it should be strongly and well made, as any disarrangement of the mechanism is liable to tend to disagreeable consequences. The third requirement, when applied to a gas meter, is that the measuring out shall be accurately done. Any variation in that respect would be fatal. It is also necessary to ensure that fraudulent use is not made of the mechanism, a point which is one of great difficulty, as the ingenuity of the public in this respect is unbounded. The space occupied by the attachment must be limited, gas meters being often fixed in positions which are cramped and confined, so that every inch of space is needed. The chief requirements of a prepayment attachment may therefore be briefly summed up as (1) simplicity, (2) strength, (3) accuracy, (4) prevention of fraud, (5) compactness. It is also advisable to effect a complete separation of the coin receiving and delivery mechanism, so that when no coin is in, the former can be operated without actuating the delivery mechanism, while once the coin is received it should not be recoverable until it has done its work.

It has been already said that prepayment mechanism is mainly divisible into two classes, the first comprising all devices in which the gravity of the falling coin is utilised to produce the effect, and the second those in which the coin is used as a gag or connecting piece between two portions of the mechanism. In applying either of these forms of coin operating devices to a gas meter, two principal methods have been adopted. In one case the action has resulted in the removal of a stop from the path of the meter drum or some other moving part, so as to allow the drum or bellows to work, the stop being again engaged when the required period of delivery was at an end. In the other form the operation of the parts by the coin is utilised to open a valve through which the gas passes into the service pipe, while the operation of the delivery mechanism returns the parts to their initial position, closing the valve and so preventing the passage of gas.

Of these two types of mechanism the latter is, in the writer's opinion, by far the most scientific and effective. It is the most natural way of regulating the supply of any liquid or fluid to close the orifice through which it must pass, and, although it may be said the locking of the tangent pin in a dry, or of the rotation of the drum in a wet meter has the same effect, it is not so perfect a method of regulation. If gas is passing through a meter at a high pressure, and the meter drum or bellows are prevented from moving by means of a stop, some gas may flow through the meter if a delivery valve is open. In any case, just as the shutting off of all the taps of the various gas fittings in a house prevents the passage of gas, and thus stops the meter effectually and without shock, so in like manner a similar arrangement applied to the meter itself gives the best result. Instances of both types will be illustrated, and it will be made clear how admirably the action of the delivery parts can be regulated.

The first declared attempt to apply the popular coin receiving mechanism to the delivery of gas was made in 1887, by a Mr. John Stewart Wallace, whose patent was numbered 1,620. His arrangement is shown in Fig. 2. The gas passed through the pipe A, which was provided with a plug tap B. On the shank of the plug was fitted a lever C, formed at its free end with a

slight taper. This lever was normally supported by a balanced lever D, one end of which came below a coin chute E. Carried by a bracket from the frame of the case in which the mechanism was enclosed was a pendant lever F, formed at its lower end with a hook of the shape shown. At F^1 a second shoulder or projecting piece was formed, with which a pin G^1 in the disc G could engage, and which fell under a shoulder G^3. The disc G was driven from the wheel H by a pinion fast on its arbor, while H was arranged to be driven from one of the rotary spindles of the index mechanism. Although this particular contrivance never came into actual use, it had within it the germ of subsequent devices, so that it will be interesting to follow its action. When a coin dropped down the chute E on to the end of the lever D, the latter was oscillated and raised the lever or handle C. This in rising pushed back the pendant lever F until the point of C passed over the incline on F, when the weight of the latter causes it to drop below C and hold it up, thus keeping the valve B open. This permitted gas to pass, and the wheel H is immediately rotated from the moving parts of the meter. The continued rotation of the wheel H is, of course, communicated to the disc G, and the pin G^1 eventually presses against the lever F, pushing it back so as to release the handle C, which falls by its own weight and closes the valve B. Although this mechanism was crude, it has the merit of being designed with a clear view of the needs of the case, and takes rank as the earliest invention for the purpose.

The next invention in point of time was that of Rowland William Brownhill, the date of this being May, 1887. Although much, at one time, was heard of this attachment it has never been largely used, although there are one or two points of merit in it. It has, moreover, a few details of more than passing interest, which will be referred to as briefly as possible. In selecting the illustrations referring to this particular device, the writer has been guided by a desire to show the essential points of the mechanism, and has neglected many details of minor importance. Looking then at Fig 3, the coin was received in a pocket A at the end of a balanced lever B. The bottom of the pocket A was closed by a balanced lever A^1, which was oscillated when it strikes a stop A^2 fixed in the position shown. The

arbor on which the lever B oscillated had fixed on it a crank, which was coupled by a connecting link to a hinged lever C, to which was attached a pawl D, normally engaging with the teeth of a ratchet wheel E, frictionally compounded with a disc F, in which was cut a notch. A knife-edged detent C^1 was fixed to C, and engaged with the notch named when the latter registered with it, but except at that period it rested on the edge of the disc F. As by means of the forked lever G the valve shown was coupled to the lever C, any movement of the latter was at once communicated to the valve spindle. The disc F was driven in the reverse direction from a moving part of the meter indicating mechanism by means of a train of gearing, including a friction clutch arrangement. The action of the mechanism, neglecting much of it which has no real bearing on the subject, was as follows. When no coin was in the machine the lever B was in the position shown. When a coin falls into A its weight overbalanced the weight of the attached parts, and caused the lever to oscillate, which it continued to do until A^1 struck the stop A^2, when the bottom of the pocket opened, and the coin fell out. The weight of the parts again restored the lever to position. The oscillation of B raised the lever C and, assuming that C^1 was then in the notch in the disc F, it lifted it out. At the same time the pawl D engaged with the ratchet wheel E and rotated it and the disc for a short distance, so that when the lever B made its upward oscillation the detent C^1 could not again fall into the notch, thus preventing the re-closing of the valve. It is obvious that the repeated oscillations of B, by the gravity of successive coins, would cause the notch in F to recede further from the point of contact of C^1 with it, and as the return of F to its initial position was effected by the rotation of the wheels coupling it to the index mechanism, it is equally clear that the period when the notch in F registered with C^1 depended upon the distance the disc F was rotated in a forward direction. It is important to note that while the disc F is carried with the ratchet wheel in its rotation, it must be capable of an independent return movement, and this is obtained by the frictional connection between the ratchet E and disc F. The two chief features to be noted in this device are, first, the employment of a ratchet and pawl to rotate the valve sustaining disc;

and second, the employment of a return mechanism, by which the disc was moved back a distance equivalent to the forward movement given to it by the lever. In a modification of this invention the coin fell, as shown in Fig. 4, between a fixed roller A and a roller A^1, borne at the end of an oscillating lever B, fastened on the axis of the lever corresponding to C, so that when the lever B oscillated C was also moved to give motion to the ratchet wheel and disc, in a manner similar to that described. It will be seen that as A^1 is on an oscillating lever B, the pressure applied by D pushed the coin against A^1, and between it and A, so that the lever B was pushed downward until the distance between A and A^1 was wide enough to let the coin fall through into a receptacle placed below. The apparatus thus described has only been cited because it was the first serious attempt to deal with the problem, but the mechanism was so complex, and the means proposed to be employed so unreliable, that it is not surprising nothing should have been heard of the invention outside a limited circle. The specification of this patent describes many modifications which are illustrated in 31 figures, and claimed in 48 claims, and in the fact that the writer had to go through all these with a critical eye, is found one explanation of this paper. The only two features which it is worth while noting are the rotation of a ratchet wheel by a pawl, operated by the coin, and the employment of a lever carrying a movable stop on to which the coin falls, and against which it is pressed by a lever.

It is now necessary to consider a device which may fairly lay claim to be the first which was practically employed, and which formed a great step in advance. It is, perhaps, not too much to say that this arrangement paved the way for the now extensive use of prepayment gas meters. Reference is now made to the mechanism patented by Messrs. Thorp and Marsh in 1889. This is illustrated in Figs. 5, 6 and 7, which show in section, through two portions of the case containing it, the two parts of the mechanism. Fig. 5 illustrates the coin receiving mechanism, which is contained in one portion of the vertical case, divided down the centre by a diaphragm, and fixed on the top of the meter as shown. The coin was received in a slot Q which guided it on to the end of the lever G, fastened on a

spindle H, borne by and passing thr
case. The coin rests on G and ag
and immediately below the foot of
without the case. The plunger and
link F, which terminated in a pin sl
the latter could make a sufficient dow
tion drew up the lever G to its ini
to be received. When a coin was in p
the plunger E, which thus rocked th
arbor H (Fig. 6.) It is also neces
that the coin receiving lever C had
contact with a stop screw g^1, fixed in
which the screw protruded into the
ward stroke of the lever G, so that
latter it could not be pushed so far
the box M. In other words the oscil
as a necessary corollary the movem
arbor H was correspondingly limit
described constituted the coin recei
which will be dealt with independentl
in the descriptions given of the diffe

The delivery mechanism is shown
other portion of the case. The arb
H, which carried a pawl, engagir
ratchet wheel N. On the boss of
engages with the spiral thread on t
the pinion was rotated, the valve
the valve K raised from its seat t
through the chamber and escape by
of the lever G, (Fig. 6,) rotated the
equal to that required to raise the
the specified quantity of gas to pa
but when a definite quantity had
against the top of the case and pr
motion of the valve spindle. The
following way. Fixed alongside a
stalk K^1 was a long pinion O with
spindle engages. The lower end of
wheel C, with which a worm on th

geared. B was rotated by means of a pin, either fixed on the meter drum as in Fig 7, or driven from the tangent lever in a dry meter. In either case the effect was to rotate the star wheel and its worm and so rotate the long pinion O which revolved the valve spindle. As the rack on the valve spindle engaged with the wheel on N, which was held stationary, the latter acted as a nut, so that the rotation of the valve stalk caused it to be slowly wound down and close the valve. This part of the mechanism is the delivery portion, and like the receiving part is comparatively simple and compact. As has been said, the arrangement was the first which received any extended practical use, and it was a great advance upon its predecessors. It was not, however, without faults, and one of the chief was that if any user put in too many pence in succession without waiting for the partial return of the valve stalk, the valve would be jammed against the top of the case so as to bend its spindle seriously. The mechanism was not so compact as was desired, and the flow of gas through the chamber containing the delivery mechanism was an objectionable feature. Still in spite of all this the device had two new points of value, viz: the separation of the coin receiving from the gas delivery mechanism, and the provision of means by which the effect of the passage of one coin could be regulated as desired. The inventors and the makers of this particular attachment deserve all the credit due to those who make a practicable arrangement for the first time, and there is no doubt that it was its success which brought the question rapidly to the fore.

In the middle of 1890, Mr. William Cowan, of the firm of W. and B. Cowan, of Edinburgh, applied for a patent for certain improvements. As this firm has probably supplied more prepayment attachments than everyone else, it is desirable to take careful note of their arrangement. Seeing, however, that they have considerably modified their mechanism, it is not fair to deal in any detail with such portions of it has have been abandoned, but merely describe those which have been retained. It may be said then that the central feature of the mechanism was the operating portion, by means of which the movement of a coin used as a gag is translated into the required motion to effect the release of the delivery means. In this arrangement a

ratchet wheel adjoining a disc or wheel with a smooth surface was employed, and these wheels were connected by friction. The disc or wheel named was provided at one point with a hole, into which a finger in a lever attached to a gas valve could fall when they registered with each other. When the finger was on the smooth part of the disc, the lever to which it is connected was oscillated and the valve was opened, but when it was in the hole the valve was closed and gas could not pass. The ratchet wheel is operated by a pawl, which is given its forward stroke when the coin plunger is pushed in. This action was very similar to that described in Brownhill. When the pawl makes its forward motion it gives to the ratchet wheel a certain rotative movement which was communicated to the disc, and thus lifted the finger out of the hole and opened the valve. A number of coins can be put in in succession, thus retaining the valve in its position. Gas being then in process of delivery the disc was slowly returned to its original position, and when the specified quantity was delivered the finger fell into the hole and the valve was closed. While retaining the prepayment wheel B the makers have given up using the disc, but employ instead a neat device. They connect with the pusher R, operating the prepayment wheel, a finger which comes in contact with a curved arm fixed on the valve spindle. The stroke of the pusher R giving the rotation of the prepayment wheel causes the finger to ascend the curved arm and so open the valve. Successive coins simply cause the finger to press on the arm until 450 cubic feet have been paid for, when a stop is brought into action and no further coins can be introduced. The prepayment wheel is returned to zero by the action of the mechanism through a friction clutch arrangement, and a pin in it pushes back the valve arm and closes the valve.

So far as this part of the mechanism is concerned it present some novel features, and a new element has been introduced into this specific combination which is of some value. Reference may now be made to Fig. 8, which is a side elevation of the improved arrangement of receiving and operating mechanism. It will be seen that the pawl P is shown resting on the edge of a segmental disc A, which adjoins and is on the same arbor as the prepayment wheel B. This disc A is formed

at one point with teeth which gear with the pinion C fixed on an arbor, which also carries the pointer D. The position of D can be adjusted by the graduated scale shown, and as the result, that of A is correspondingly affected. It will be at once noticed that, as the forward stroke of P is limited, its effect upon the prepayment wheel B depends upon the period of its dwell upon A, and that so long as it is supported by A it can not engage with B. Thus, by the adjustment of A, the moment of the engagement of P with B, is regulated. In this way the distance of the rotation of B, after each coin has been introduced, is affected, and the amount of the return movement required is correspondingly changed. Thus the volume of gas delivered in exchange for one coin will be easily regulated. This is a novel and interesting feature, and is worthy of special note.

We now come to deal with the arrangement of the coin receiving and operating mechanism, which is also shown in Fig. 8. Alongside the coin slot piece R is mounted a box or track S working in guides, and having within it a cam T, which is carried on an arbor rotated by a handle without the case. The box S has a pusher attached to it, arranged to come behind the coin when the latter is held in the slot piece R, an opening being left in the rear of the latter to permit the entrance of the pusher. When the coin is in the slot the cam T is rotated so as to cause the pusher to come behind the coin, and thus exercise a pressure on it so as to force it and the coin piece forward. The shape of the cam T is such that it cannot operate the coin piece except in one direction, so that when a coin is in it cannot again be withdrawn. The pawl P is also carried forward, and, at the right moment, is dropped on to the teeth of the ratchet B, thus operating the mechanism. The line of thrust is direct, and the action thus becomes certain in its effect. The cam T is provided with projections which return the box S and slot piece R to their initial positions. Other details are omitted, as not being necessary to the present purpose.

The attachment which is made by Messrs. J. & J. Braddock, of Oldham, is shown in Fig. 9 in partial section, and the coin receiving mechanism in Fig. 10. The coin is received in a cylin-

drical shell revolving in a suitable framing, and mounted on a spindle which passes through the case, and has on its outer end a handle or thumb piece. The coin is not entirely within the coin-receiver A when it is in working position, but projects a little beyond it so as to act as a tooth, being necessarily engaged with the teeth of a ratchet wheel B, mounted on the valve spindle and compounded with the wheel C. This carries on its face a cam surface D, which is shaped as follows: From what may be called its initial position in the mechanism, that is, when it has not been operated by a coin, the cam face rapidly rises until it projects about a half inch above its lowest point. For the remainder of the circle the path remains of uniform height, and is terminated by a projection immediately in front of the depression. Adjoining the cam named is a wheel E, fixed on the valve spindle, and having a projecting arm on its face, carrying a small runner which engages with the cam face, being always pressed against it by a spring F. This pushes against the back of the valve G as shown, and thus continually tends to push the wheel E towards the cam D. The action of this mechanism is simple. When a coin is dropped into the coin receiver A, the handle is turned so as to operate the ratchet wheel B, which with its attached cam wheel is revolved. This brings the ascending part of the cam D in contact with the projection on E, forcing the latter from the wheel C, thus sliding the valve spindle and opening the valve G. So long as the wheel C is revolved by successive coins, so long does the valve remain open, but when a definite volume of gas has been paid for, the projection on E comes in contact with the projection on D, and no further rotary motion of C can take place until the wheel E has been turned backward. The return motion of E is obtained by suitable gearing from a rotative part of the meter mechanism, the final member of the train gearing with the wheel C and giving it the reverse action. At the beginning of this train of gearing rotating the wheel E in a reverse direction is a change arrangement, by which the speed at which the mechanism is returned is regulated. Thus the forward action caused by the coin is uniform, but the velocity of the return is varied to suit different values of gas. When the reversal of C has been conducted long enough, the

projection on E begins to travel the inclined portion of the cam D, and thus permits the spring F to close the valve. This operation takes place gradually, so that the slow diminution of the light gives warning that the supply is about to be cut off. Messrs. Braddock have reversed the arrangement recently, now causing the valve to be opened by the spring and closing it by the reverse action of a cam. This still further simplifies the mechanism.

Without at present going into the question of fraud prevention, it may be pointed out that only one direction of rotation can be given to the receiver so long as a coin is held in it, and that the discharge of the coin again frees the receiver. The coin is discharged when it came out of contact with the toothed wheel, being then able to fall into a receiving box. This mechanism is very simple and compact, and on that account is very meritorious. By reason of its being a valve motion it possesses advantages over those which merely stopped the meter.

The next attachment in chronological order is that made by Messrs. Sawer & Purves, of Manchester, which is illustrated in its latest form. In this case also a rotary coin receiver is employed, being shown in Fig. 11 in section, and in Fig. 12 in end view. The coin is passed through a slit in the framing into a cylindrical coin receiver A, turned from outside the case by a thumb-piece. Adjoining the receiver is a flanged disc B, mounted upon a longitudinal spindle C (Fig. 13) which forms part of the delivery mechanism. The disc B carries in its face two pins diametrically opposite each other, which adjoin two other pins projecting from within the disc through holes formed in its web. These pins are also diametrically opposite each other, and the result is that there is a space between each pair, between which the coin, when dropped into the coin receiver, can pass. Inside a circular chamber formed within the disc, two hinged detents D (Fig. 14) are contained. One arm of each detent has fixed in it the pin projecting through the web of the disc, and the other is formed as a catch which can engage in a notch formed in a circular ring E, cast on the framing of the delivery mechanism. Fixed alongside the flange of the disc is a tangentially disposed bracket F, containing a small roller, too large in diameter to pass between the bracket and disc, and

yet small enough to turn freely when in the wider part of the space. The result is that the disc cannot be turned back. So long as no coin is in the receiver, the latter can be turned freely, but when a coin falls in and the receiver is rotated, the pressure of the coin against the projecting pin in the detent D, causes the latter to be freed from the notch in E, and thus permits the disc D to be rotated. As soon as half a revolution has taken place the second detent locks the disc, the coin falls out and the receiver is again freed.

As was said the disc B is on the spindle C, which as shown in Fig. 13, goes across the framing and has on its reverse end a pinion which is arranged to be easily removed. This forms the driver of a short train of wheels rotating the screw G borne in the framing. By a quadrant of the ordinary type the pinion can be changed for one of any size, so as to vary the effect of the revolutions of C on G. On the screw G is mounted a pinion H with a threaded eye, which is borne in a forked carriage K sliding in two guides, one at each end of G, and in the same plane. This pinion H gears with a long pinion J, driven as shown from the meter mechanism by a worm and worm wheel. The carriage K has a pin at each end, one of which engages in the slot of the bar L, shewn separately in two views, Figs. 15 and 16. This bar is coupled to a valve M in a separate chamber by the links L^1 L^2, which are respectively fixed to two ends of an arbor passing through the walls of the chamber. This explanation will serve to enable the action of the mechanism to be understood. Looking at Fig. 13 when the carriage is in its initial position, the pin K fixed in it is at the end of the angular slot in L, and the valve M is closed. As the carriage is moved by the rotation of the screw from the spindle C, the bar is raised on its pivot K^2, and by its attached links opens the valve M. So long as the pin K^1 is in touch with the straight slot in L the valve remains open. A definite number of coins can be put in, when the carriage rocks a lever, which comes beneath a stop on the coin receiver and prevents it from being rotated so as to act on the mechanism. It is moreover held in such a position that another penny cannot be put in. The limit of this machine is fixed at a determined maximum volume, and it is then locked until a return movement of

carriage or cam is made. Suppose the carriage K at the full extent of its movement. Gas is being delivered, and the worm wheel on the end of the long pinion J is driven so as to rotate the latter. As J gears with the pinion H, and as the latter, while free to rotate, is held by the carriage K, its rotation by J causes it to act as a revolving nut, and gradually moves the carriage back to zero. This means that when K' again enters the angular part of the slot in L, it draws down the valve, gradually closing it and so stopping the supply of gas. It is obvious that if the change wheels are varied, so as to alter the amount of the rotation of the screw G, the forward motion of the carriage K will be affected. As the velocity of the return movement is uniform, this means that a greater or less amount of gas is given in exchange for one coin. In this, as in all other arrangements, the coin falls into a sealed box after it has done its work.

The attachment made by Wm. Parkinson & Co., of London, of which an illustration was not obtainable in time, is one of some merit. It consists of a partially cylindrical receiver which is formed at one point with a pocket for the reception of the coin, the receiver being, as usual, rotated from without the case. The extent of the stroke of the receiver can be limited to a movable stop plate, the face of which is marked with successive numbers, indicating the number of cubic feet given for each coin. A gap is left in the front of the case through which one set of figures can be seen, so that the quantity being delivered for a penny can be noted by the customer. Adjoining the coin receiver is a wheel with deep teeth, something like that used by Braddock, and the coin pocket is only wide enough to receive a portion of the coin, the remainder projecting so as to engage with one of the teeth in the wheel named. When the coin is in, therefore, there is a working connection between the two parts. The toothed wheel is fastened on a horizontal spindle going across the tangent mechanism case, and supported by suitable bearings. At one point the spindle is formed with a screw which passes through a worm wheel with a threaded eye. The wheel is carried in bearings suitably placed, so that it is free to rotate but cannot move longitudinally. Coupled to the end of this spindle is a link which is connected with a rocking shaft, to an arm of which the valve is connected. If, therefore,

the rocking shaft is oscillated the valve is opened. Tl is supplementary to the ordinary slide valve worked tangent mechanism. The action is as follows: When is put in it falls partly into the coin receiver and partly toothed wheel, thus setting up a connection between the rotating the coin receiver the spindle is revolved, and a certain freedom of longitudinal movement it, by r passing through the fixed nut, is moved inwards. In t by its attached links, it opens the supplementary va permits gas to pass. Further coins can be put in definite amount has been paid for, when the mech locked. The return of the spindle is effected by the wor named, which is geared with a worm rotated from tl mechanism; the action of this wheel being similar previously described in connection with Sawer and attachment. Any reversal of the coin receiver after tl duction of a coin is prevented by the formation, on the the toothed wheel of a ratchet, with which a pawl always

The attachment made by Messrs. Thomas Glover illustrated in Figs. 17 and 18. In this case two discs are mounted on a central vertical spindle, but are qu pendent of each other. As shown in the plan view, in they are formed with a scroll on their inner faces witl as small pinion G engages, G is held at one end of bar or frame A, which is coupled to a rocking shaft fro the valve is operated. In the edge of the upper disc C a of square notches are cut, into one of which the penny being held in a slot formed in a horizontal arm on piece. The latter passes through the upper case of the ment, and has a handle fitted on it, by which the ope completed. By the gearing shown the lower disc D is to a working part of the meter, so that it can be return the meter is passing gas. On the edge of a fixed disc J, l holes are drilled, into which a detent pin L, at the en spring arm M, can take. Each of these holes is int limit the supply of gas one foot, and there is thus a con range. The operation of the mechanism is as foll penny is dropped in and is held in the arm of the tu resting at the same time partly in a notch in the uppe

The arm being now turned rotates the disc C, and also the wheel G. The lower disc D being stationary, the wheel G is caused to move inwards on the scroll formed on D, and so draw in the bar A, which thus opens the valve. The extent to which the disc C can be revolved is determined by the position of D, as held by the peg L in the arm M. A stop P is formed on a fixed disc J, so that the nearer the hole in which the peg L is placed relatively to the position of P, the shorter the distance C can be rotated before the penny comes into contact with P. In this way the amount the valve is opened is regulated. Thus the effect produced after each penny is inserted is fixed, and only a certain volume is provided for. The rotation of the lower disc D from the meter mechanism, the velocity of which is uniform, gradually pushes back the arm A and closes the valve. This mechanism is ingenious and strong, and although the wheel G acts like the threaded worm wheel in the two preceding examples, it is novel in its design and application.

Having thus described, in some detail, several different devices for this purpose, it is now possible to say something about the various mechanical features which are specially devised to meet difficulties arising in practice. Remembering the list of requirements laid down at an early stage as essentials, let us see how far the various attachments described meet the case. The arrangements of Thorp and Marsh, Brownhill, and Wallace, it is not necessary to deal with, because, although some of the first-named are in use, they are practically out of the running. It has been said that an arrangement which closes a valve rather than one which stops the meter is to be preferred, and, apart from the reason which has been previously given, this statement is confirmed by reason of public convenience, which would not be served if failure of the gas supply took place without warning. This is avoided by the use of a valve, which gradually diminishes the supply and so gives ample warning before the shutting off of the gas. As was stated, it is necessary to avoid fraud, which it was at one time thought would be very serious. Experience has not justified this anticipation, but it is still necessary to guard against it. Of course so long as the meter is working, the index is registering the quantity of gas passing, and to this extent acts as a check

upon the consumer. The most obvious method of cheating the meter would be by putting in the coin, partly operating the mechanism, and then withdrawing the coin. This is easily and simply met by the employment of a specially-shaped rotating cam, by which the coin slide is moved in Cowan's arrangement; by the construction of the ratchet wheel in Braddock's, which will not permit of the return of the coin without reversing the movement of the cam course and so setting the parts to their original position; and by the small roller and bracket in Sawer and Purves which absolutely wedges the disc and prevents it being turned back. The coin must therefore be delivered. Another form of fraud, the introduction of wires, etc., is now quite done away with, because in most arrangements the coin is used as a gag, and there is no part which can be operated except by it. The models which are exhibited will show how difficult it is to fraudulently use the best forms of attachment. As Mr. Frank Livesey recently said "the methods now adopted in the best meters will prevent tampering in cases where this evidence"—the money box—"is not forthcoming." The testimony of those who use large numbers of these attachments is proof of the fact that the best makers are now producing attachments which are substantially fraud proof.

Dealing now with the other points laid down early in this paper, it will be seen that the mechanism used is now such that it is practically impossible for there to be any inaccuracy in the quantity of gas delivered for each coin. By means of special tools the parts are made with as much exactness as the index, and just as the latter is relied upon, it may fairly be presumed that the new attachment can be. The whole matter turns upon the character of the mechanism, and this it will be seen is very good. It is no part of the duty of the writer to select any specimen for special commendation in this respect, and it is only necessary to point out that the accuracy of the mechanism depends mainly upon its positiveness and directness. The universal employment of the coin as a gag implies that the moment pressure is employed the mechanism begins to act, and in like manner the direct gearing of the parts to the index mechanism involves the immediate reversal of what may

be called the operative portion. It is only necessary to point out to a body of engineers that it may be taken as a general rule that the more positive, simple, and direct the connection is between the parts which are relied on for doing either portion of the work, the more likely is accuracy to be attained. If that general statement is applied to any mechanism devised for this purpose, its relative merit could be easily ascertained. That this particular feature has not been lost sight of, and the necessary requirements fully met, is borne out by a statement made by Mr. Frank Livesey, who said recently, "With some meters the losses had amounted to $1\frac{3}{4}$ per cent. on the rental; but it must be remembered that the first ones issued were not so accurate as those now made. . . . . The $1\frac{3}{4}$ per cent. includes many of these early pattern meters, and therefore it must not be considered as a permanent feature. There is, in fact, no reason to suppose that the losses on the prepayment system should be greater than the bad debts of the ordinary consumer." This statement has received confirmation from other users, and may therefore be taken as embodying the facts.

The two other features of strength and compactness might almost be left to the judgment of those who inspect the meters. Strength is in most cases amply provided for, and although not excessive is, in the writer's opinion, sufficient for all practical purposes. So far as compactness is concerned none of the attachments exhibited can be objected to on that score, but if any one is chosen for special notice in that respect it is that made by Messrs. Braddock.

The question of changing the extent to which the effect of the operating mechanism can be varied, so as to give different volumes for the same coin, is one to which undue importance may be attached. Although changes are made in the price of gas in any locality from time to time, they are not so frequent as to necessitate elaborate mechanism for the purpose. So long as the changes can be made conveniently without disturbing the meter, all that is required is done. It may be said that it is practically immaterial whether the effect is produced by varying the action of the parts which open the valve, or those which close it. It is, of course, essential that the change be made with certainty, and, in the opinion of the writer, this

can be done as effectually by means of change wheels, as in the Sawer and Purves arrangement, as by the special device adopted by Messrs. Cowan. The matter is purely one of convenience, if looked at from the comparative point of view, and it is that which will probably decide the question, provided that the accuracy of the change is equally certain in each instance. It may, perhaps, be doubted by some one whether it is not easy for the consumer to alter the adjustment of the parts. To this it may be answered that the adjusting mechanism is enclosed in a sealed case, and that even if any such tampering took place it will be at once detected when the index of the meter is read, and the amount there registered compared with the coins contained in the box. In Parkinson's attachment it will be noticed that the limitation of the action of the coin is effected by adjusting the amount of rotation of the coin receiver, a principle which is observable in others. For instance Cowan regulates the operative stroke of his pawl while retaining a uniform action of his pusher; Sawer and Purves have a fixed action of the receiver but vary its effect by change wheels, and Glover regulates the sweep of his upper disc, and thus limits the operative action on the sliding bar. Braddock, on the other hand, depends on a variation of the rate of the return motion of the valve, while uniformly maintaining the operation of the coin receiver. In the opinion of the writer it may fairly be said that gas companies have at their command attachments which fulfil all the requirements stated at an early stage, and that there is little reason to expect, either inaccuracy, undue cost for repairs, or liability to fraudulent use when they are employed. It is only necessary to say further that all the arrangements described have dials which show the quantity of gas paid for but unconsumed, and most of them also show the volume given for each penny.

Nothing has been said about another type of mechanism known as stop-index meters. These are, briefly, meters fitted with an adjustable arrangement which enables an inspector, on receipt of a sum of money, to arrange the index so that when gas of the required value has been passed, the meter will be stopped. In one or two cases this course is preferred, but

the tide of feeling is setting in so strongly towards slot attachments that it will probably soon be abandoned. In any case there is nothing to prevent any slot meter from being made to use a shilling instead of a penny, as a slight change in the return gearing will effect the object. It is becoming more obvious daily, that the real field for the employment of prepayment attachments is that enormous one existing among the poorer classes, where the democratic penny is in more request than the middle class shilling.

It may perhaps be of interest to detail the steps which are being taken by the various companies to induce the use of gas, and at the same time to introduce the prepayment system. This matter must not be confounded with a purely lighting scheme, as it will be shown that, while that side of the question has not been neglected, the use of gas can be encouraged in another way of almost equal importance. In the course of an interview with Mr. Foulger, of the Gas Light and Coke Company, which was reported in the *Gas World* of the 27th October, that gentleman, after explaining that they had made a trial of prepayment meters for some few months, gave particulars of what they intended to do to encourage the use of gas. He said they proposed to introduce into houses within their district, at their own cost, plain pendants and brackets and a cooking stove with their connections, but of course under a specific agreement with the owner. The cost of fitting will be from £7 to £8, and it is expected to recoup this outlay by the extra profits to be obtained from the gas sold. In that particular case a charge of 3s. 4d. per 1,000 cubic feet is resorted to—equivalent to 25 cubic feet for each penny—or 6d. per 1,000 more than the ordinary charge, the extra being relied upon to cover the interest on capital expended. The South Metropolitan Gas Co. supply one pendant, two brackets, and a small cooker at a charge of £5. 11s. 9d., and this expenditure is compensated for by an extra charge of 9d. per 1,000 cubic feet, which it is expected would provide a sum giving an adequate return. Without going into many details on this special point, it may be said that the character of the fittings supplied is usually about that described above, and their cost varies from £3 to £8 according to the quality, about £4 being a usual amount.

To compensate for that an extra charge per 1,
4d. to 8d. is made, so that, when it is rem
most cases the hire includes not only the ga
fittings and a small cooker, it will be seen t
an excessive one. It is obvious that this is
and may have great consequences. Of cou
involves an arrangement with the owner of
otherwise the introduction of the fittings will
difficulty, but there does not seem to be any
this. From the tenant's point of view th
undoubted advantage. For a sum of from 1
week, paid a few pence at a time, the cost
cooking is entirely met, even if 4 lights are use
the cost in a smaller house being corresponding

It is now evident that the system has taken
to use an Americanism, it has come to stay.
has been made of it the results have been satis
parties. Thus in Liverpool there are about
meters at work, the London Gas Companies are
hundreds weekly, and the natural result is tha
by the electric light is being filled and more t
experience of those who have been bold enou
experiment shows that a use of from 10,000
feet per year may be looked for from each con
important the new departure may become is
it is stated that in Croydon the extra co
obtained in twelve months is 16 millions of cu
thirtieth of the whole consumption. Furth
available shows that the tendency is for the
grow after the system is adopted, and it i
noting that where the most liberal policy is p
greater use is made of gas. In a short space
be found that by the adoption of the system
the light be brought to the houses of the ve
will be so brought at a profit to the Company
supplying it. It may be stated as a curious
the private gas companies rather than to Corpo
development of this system is due, the stimulus
being apparently much stronger in the one cas

In concluding this paper the writer wishes to express his thanks to the numerous firms who have enabled him to exhibit their attachments, and thus make the subject more interesting. It has not been possible to describe or illustrate every prepayment attachment which is on the market, but those which have been dealt with may be designated the best known, most of them being in extensive use. It is, in the writer's opinion, well established that, considering the short time the mechanism has been required, the mechanical skill of the various makers of meters has enabled them to produce attachments of a high degree of merit and effectiveness. Considering what is required of them the attachments are simple, and in this, as in other things, it is shown that an established need has not to wait long to be met by the exercise of the skill of the engineer and mechanician.

DISCUSSION.

The President (Mr. T. Daniels) said the paper had been a most interesting one. He had no idea there was so much ingenuity displayed, or that there was so much mechanism in these meters. The fact that so many of them were being made must certainly be good for trade. It would be a good thing, if by such means, they could supersede the use by the working-classes of those paraffin lamps which were so very dangerous.

Mr. John West, who was invited to open the discussion, said he was not surprised at the President's remarks about the ingenuity displayed in these meters. A lot of brain power had certainly been expended in perfecting the devices which Mr. Nasmith had described to them, and the delicacy and care with which the work had to be done might be gathered from the fact that they were rejected by the Government inspector if they were found to register 2 per cent. fast or 3 per cent slow. He remembered that in the year 1887 he was at Birmingham on the first occasion on which meters of that kind were shown, and being a little old-fashioned he did not much care for the arrange-

ment at first, although it struck him as being rather ingenious. He asked Mr. Brownhill how he proposed to get over the variation in price, and the reply was that that might be done by taking a discount off, which was not a bad suggestion. But that and other difficulties had since been overcome by mechanical arrangements, and now the making of these meters furnished a great amount of work in the Manchester district and in other districts. Not only were poor people using them, but his friend Mr. Ellery, of Bath, informed him that some of his consumers who had hitherto paid quarterly wished the prepayment meters put into their houses, as they preferred weekly to quarterly payments. The introduction of these meters helped to overcome the pernicious system of deposits, which was in many cases a great hindrance to the use of gas. As Mr. Nasmith had indicated, the adoption of these meters had resulted in a great increase in the consumption of gas. If only gas companies, and corporations owning gasworks, would cultivate this field that lay at their doors they need have no fear of the electric light. He did not quite agree with Mr. Nasmith in what he said about the stop-index meters, as he believed they might be found very suitable in certain localities; the gas engineer at Ramsgate, Mr. Valon, had found them very useful there. But no doubt in districts composed of small cottages the penny-in-the-slot meters were more acceptable.

Mr. T. Ashbury said he felt sure they were all glad to see Mr. West, the ex-president of the Gas Institute, amongst them, and to hear his opinion on a subject in which he was an expert. He considered that the meters about which they had been hearing were likely to prove most valuable agents for the promotion of thrift and comfort amongst working people, and he hoped Manchester would not be behind in the matter. It was a surprise to him that some of the great companies and corporations had not encouraged the use of gas by the use of the prepayment system more than they had done.

Mr. West said the Manchester Corporation were introducing the prepayment meter, although they were not putting in the fittings.

Mr. Ashbury admitted Mr. West's statement, but replied that they were not doing as well as Liverpool, for example. There really seemed to be no limit to the extent to which these meters could be used.

Mr. W. Lawson inquired as to the efficacy of the means for preventing frand. He stated that it had been found necessary to remove many automatic machines of another kind from the neighbourhood of certain engineering establishments, as it was found that all the sweetmeats, &c., disappeared, and nothing was received in exchange except washers, bits of iron, &c.

Mr. S. Boswell said it seemed to him that Glover's arrangement was the simplest of the lot, as it provided for altering the quantity delivered by the insertion of a peg, instead of by a system of change wheels.

Mr. D. Fulton said the method of stopping the supply of gas by the closing of a valve seemed to be the most sensible that could be adopted, but there was the difficulty that the valve might easily be clogged by deposits from the gas. The most direct and sensible closing arrangement appeared to him to be that of Messrs. Braddock, but it was open to the objection that it closed with a spring—a method which engineers never cared for, if they could get something positive. Where the valve was made of hard metal there was the risk that it might not always completely close, whereas a soft metal might be fairly depended upon to fill up the space. Such a valve, he was informed, had been introduced by an Oldham firm which Mr. Nasmith had not introduced at all, although it was one of the leading firms in the trade—he referred to Messrs. George Orme & Co. Some passing reference might have been made to them.

Mr. A. Saxon said Mr. West seemed so devoted to gas that he did not recognise the possibilities of the electric light. Why should not electricians adopt a prepayment meter of the same kind? It must be remembered that although the electric light was dearer than gas it had many compensating advantages.

Mr. P. Bebbington said he had listened t
discussion with interest, as for about eighty h
had been trying the prepayment system on a
London. He was glad to say that he had g
satisfactorily.

The President, in proposing a vote of thanks
expressed his hearty appreciation of the thoro
manner in which he had dealt with his subject
was a little extravagant to have two meters, bu
the course of time a combined type would be a

The vote of thanks was carried with acclama

Mr. Nasmith said he agreed with Mr. Bosw
arrangement was extremely ingenious, but he
as to say it was the simplest of all; he thoug
simpler mechanism than that presented by M
Just one word in reply to Mr. Fulton. He kn
Orme were claiming the use of a soft valve.
point to express an opinion upon, but he thou
have some difficulty in establishing a claim to a
although they might establish a claim to operat
a specific way. Had the soft valve been a new
thing he would have mentioned it, but he cons
difficulties foreshadowed by Mr. Fulton with r
of a hard valve were not likely to arise. That,
matter of opinion. Of course, he was aware th
had made several of these attachments, and he
that they were just about to change the charact
ment they were making. It was not his fault
exhibit their mechanism; if a meter and attach
sent to him he would have exhibited it. He
exhibit an old mechanism which they were n
when there was a new and better mechanism.
index meter, it seemed to him that it was do
was just as easy to set the meters he had show
give a shilling's worth of gas as to give a p
America they sold 5 cents. worth of gas. A 5
a much smaller coin than a penny, and if t

smaller coin they could also use a larger. All that was needed was a slight variation in the size of the coin receiver, and it was done. And there was this advantage that the prepayment meter had over the stop-index meter, that there was no danger of the gas consumer being left in the dark. In reply to Mr. Lawson, his own experience told him that the attachments he had exhibited were all practically fraud-proof devices. Mr. Saxon made some remarks about electricity. There was no difficulty about a prepayment meter for electricity—in fact, he believed there was already one in existence. In conclusion, Mr. Nasmith said he wished it to be clearly understood that he had only expressed his own opinions, and they were only entitled to their own weight, and were not to be regarded as given with any authority.

PREPAYMENT GAS METERS.

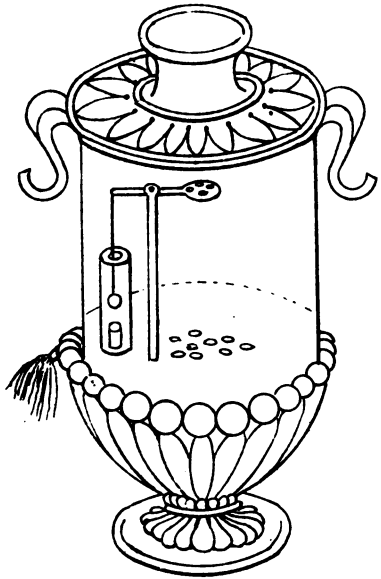

Fig. 1.

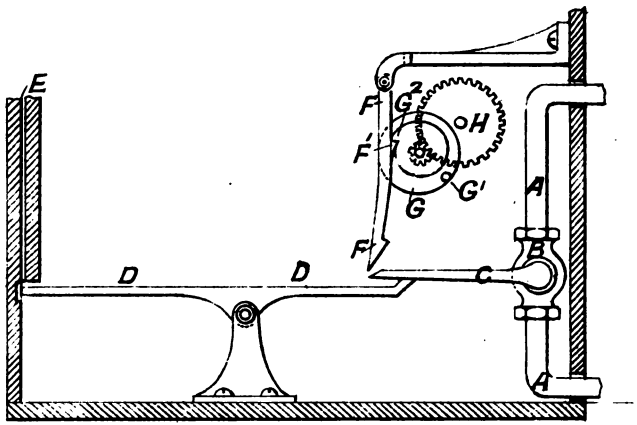

Fig. 2.

ORK
ARY

LENOX AND
TILDEN FOUNDATIONS
R L

PREPAYMENT GAS METERS.

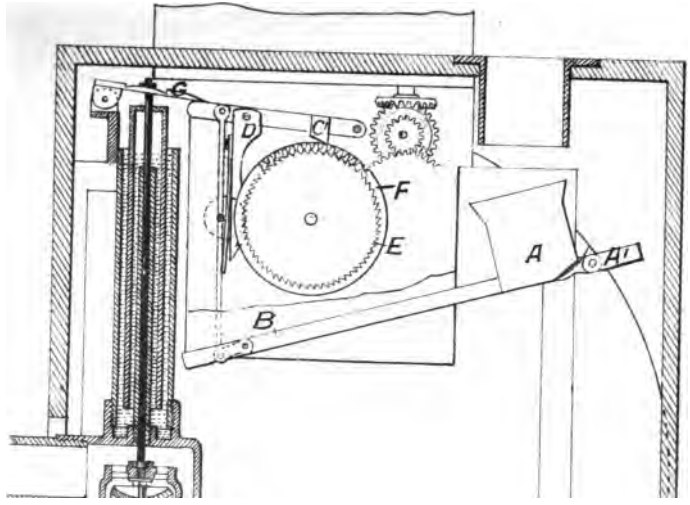

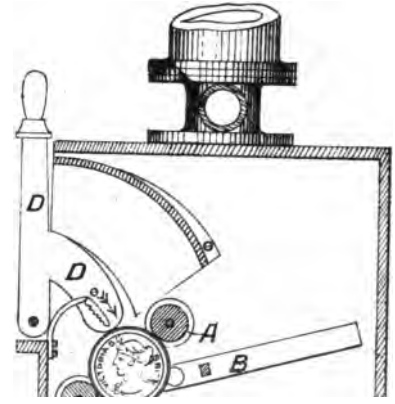

AK
ARY

ASTOR, LENOX AND
TILDEN FOUNDATIONS
R L

PREPAYMENT GAS METERS.

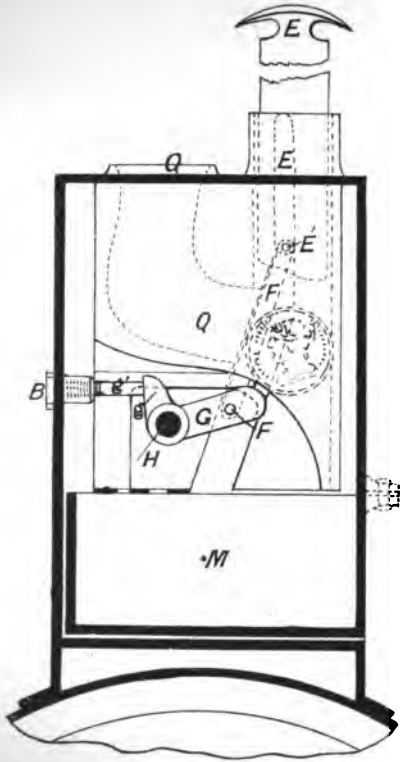

Fig. 5.

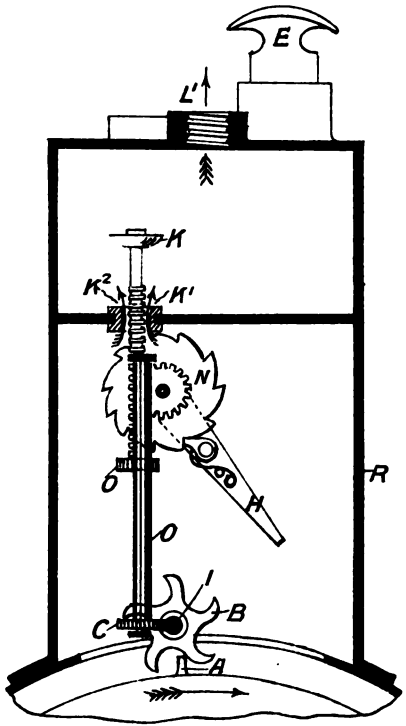

Fig. 7.

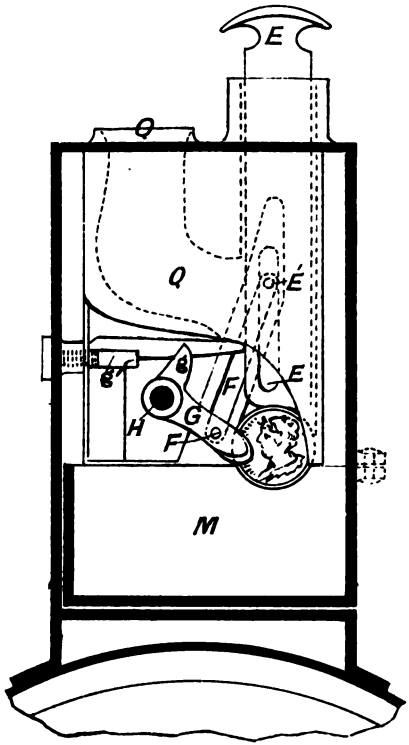

Fig.

W YORK
ARY

NOX AND
OUNDATIONS
R L

PREPAYMENT GAS METERS.

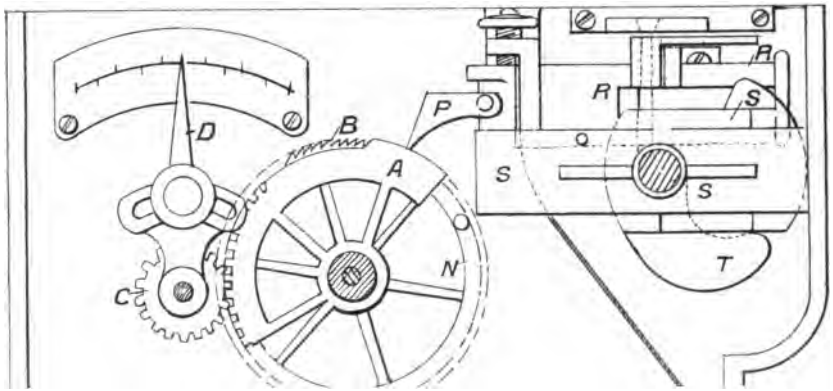

THE NEW YORK
PUBLIC LIBRARY
ASTOR, LENOX AND
TILDEN FOUNDATIONS
R L

PREPAYMENT GAS METERS.

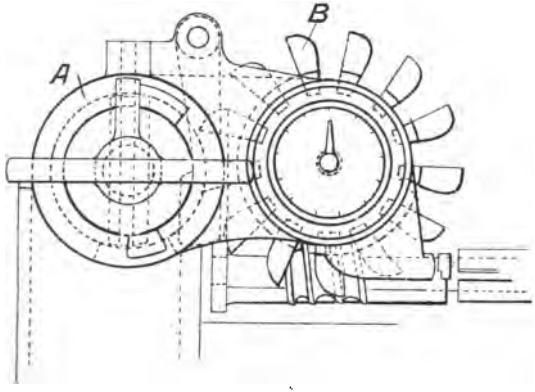

Fig. 10.

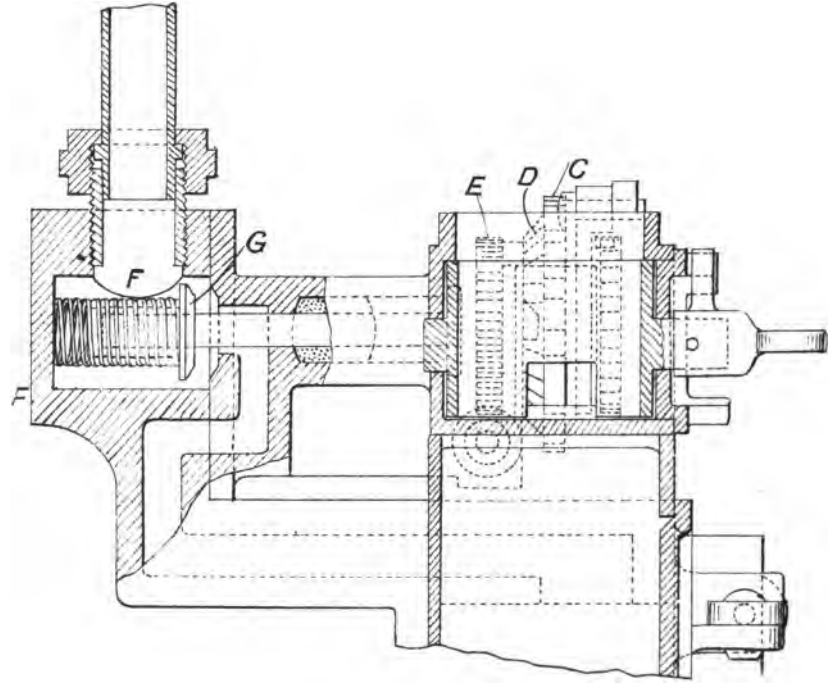

K
RY
ND
ILDEN FOUNDATIONS
R L

PREPAYMENT GAS METERS.

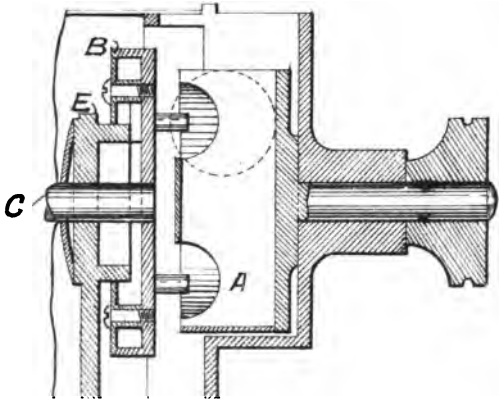

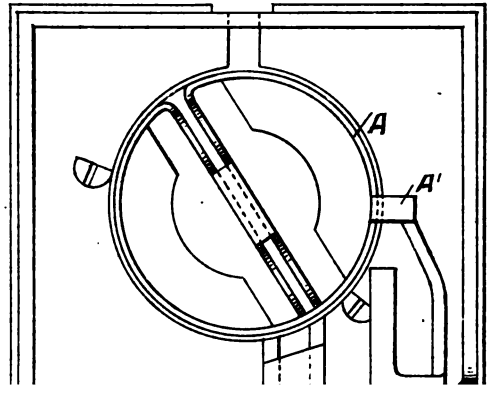

PK
ARY
LX AND
FOUNDATIONS
R
L

PREPAYMENT GAS METERS.

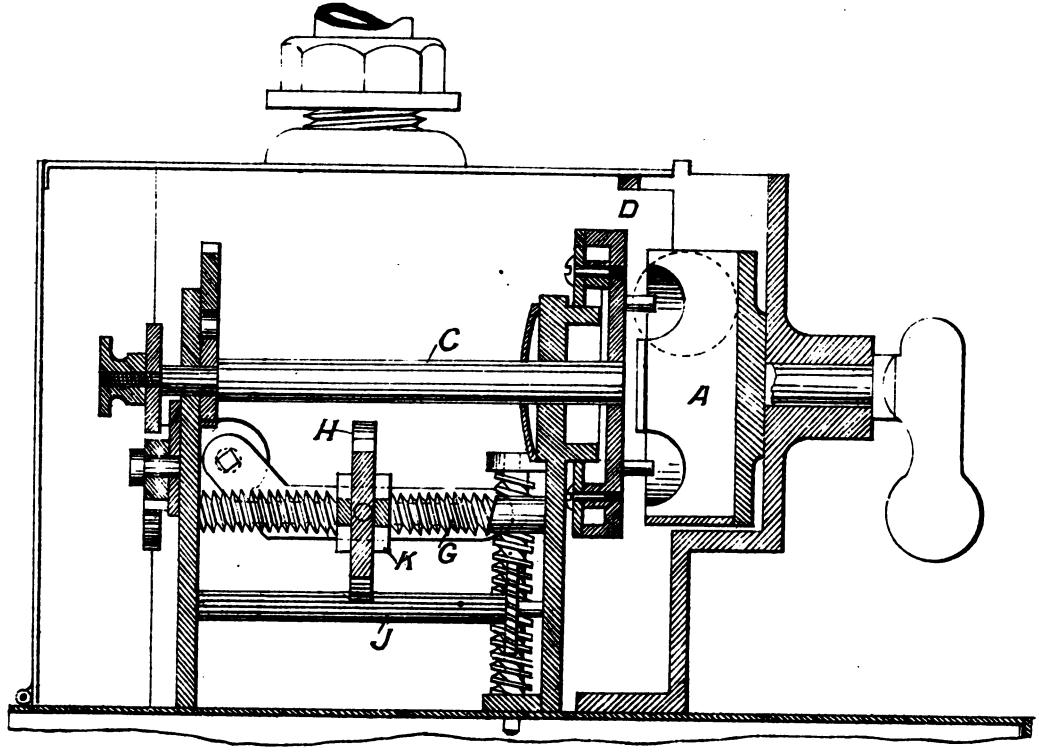

Fig. 13.

YORK
ARY
X AND
DATIONS
R L

PREPAYMENT GAS METERS.

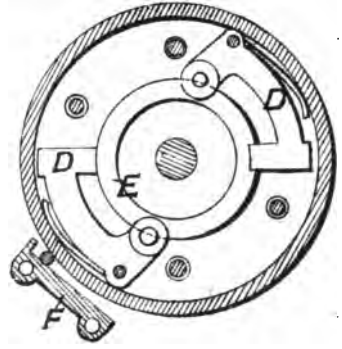

Fig. 14.

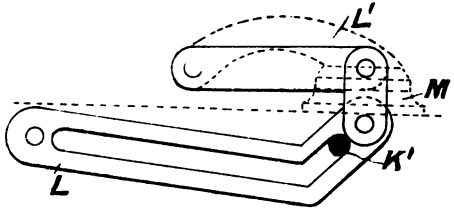

Fig. 15

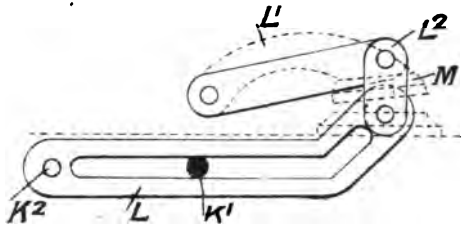

Fig. 16.

AND
TILDEN FOUNDATIONS

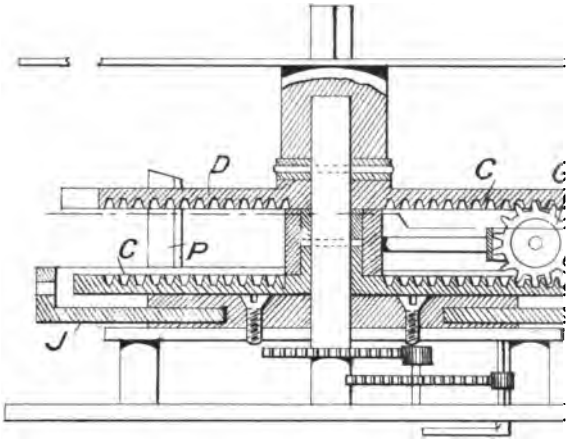

Fig. 17.

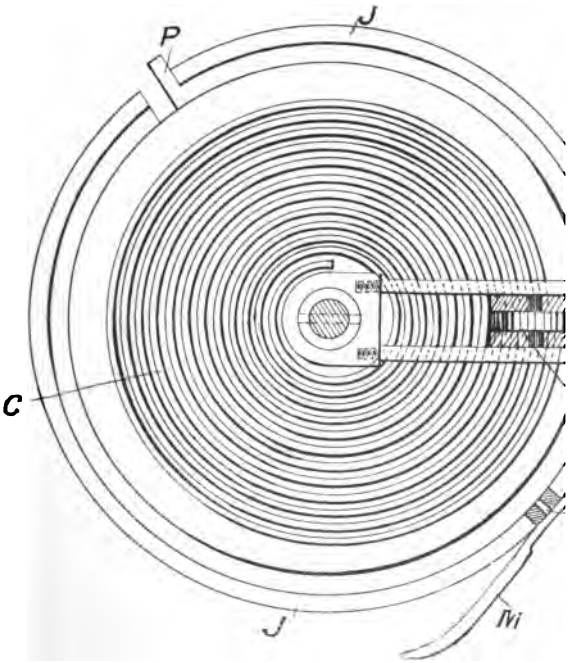

Fig. 18.

NEW YORK
PUBLIC LIBRARY
ASTOR, LENOX AND
TILDEN FOUNDATIONS

39TH Annual

OF THE COUNC

1894.

MANCHESTER:
HERALD & WALKER, TYP., POOL FOLD CHAMBERS, OFF C
1895.

PK
ARY
NOX AND
TILDEN FOUNDATIONS
R L

PREPAYMENT GAS METERS.

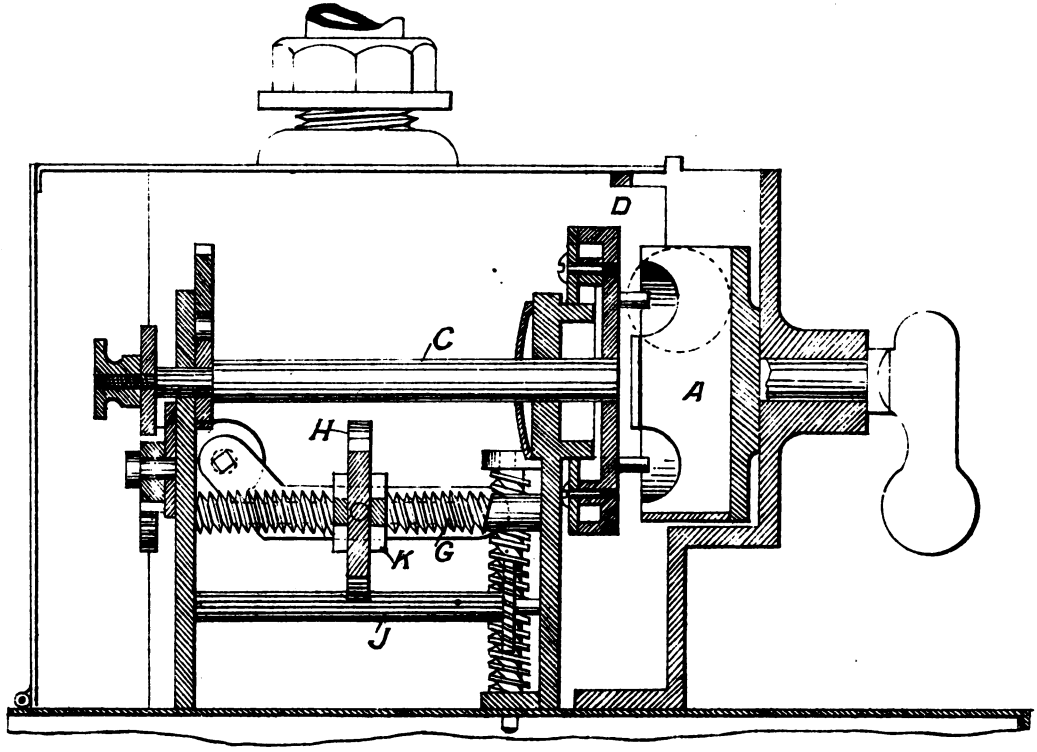

Fig. 13.

THE NEW YORK
PUBLIC LIBRARY

ASTOR, LENOX AND
TILDEN FOUNDATIONS
R L

PREPAYMENT GAS METERS.

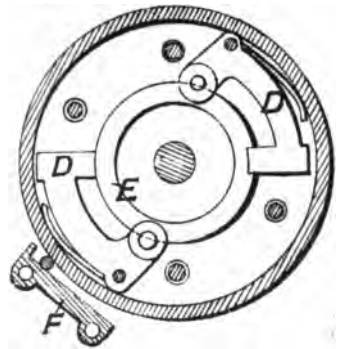

Fig. 14.

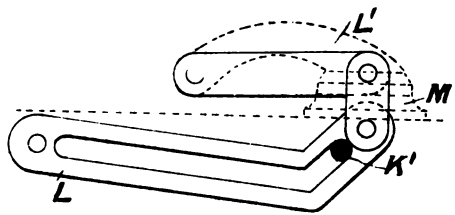

Fig. 15

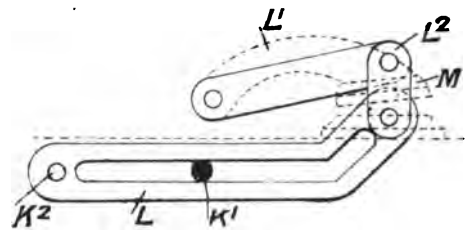

Fig. 16.

MANCHESTER ASSOCIATION OF ENGINEERS.

RY

AND
TILDEN FOUNDATIONS

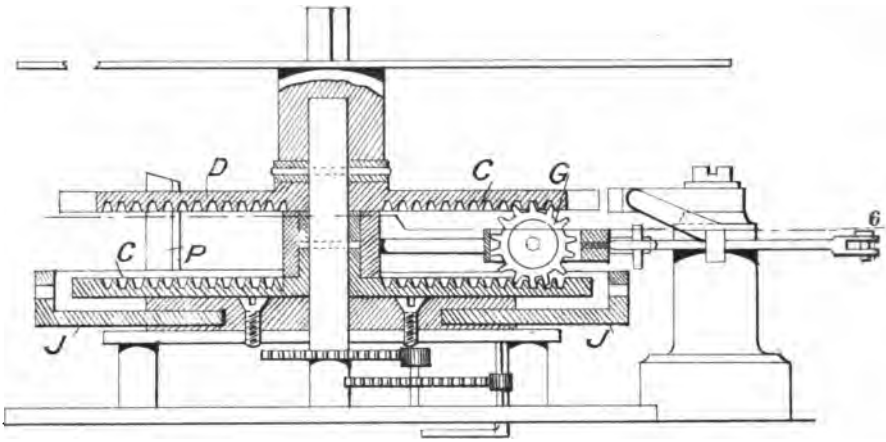

Fig. 17.

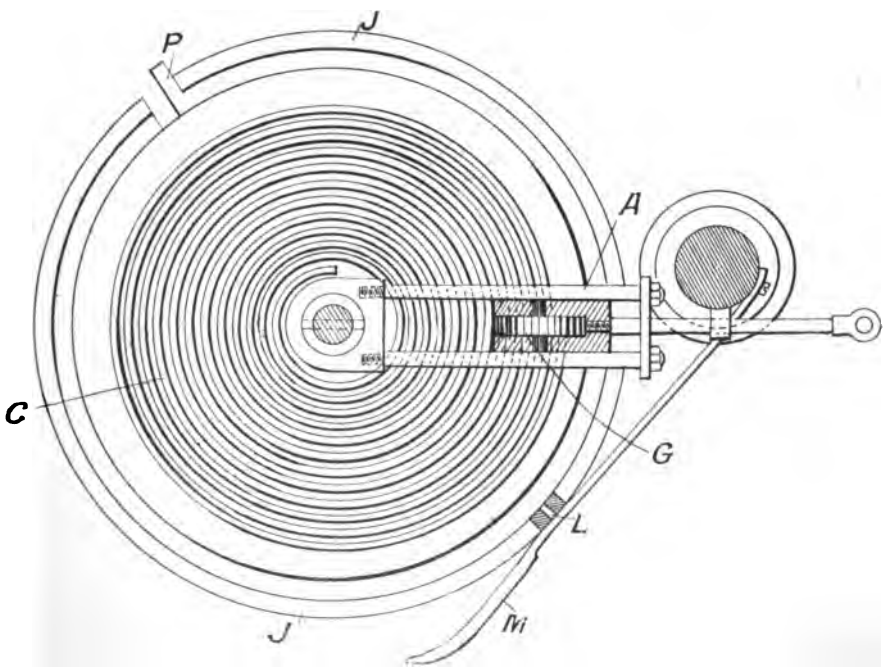

Fig. 18.

NEW YORK
PUBLIC LIBRARY

ASTOR, LENOX AND
TILDEN FOUNDATIONS
R L

39TH Annual

OF THE COUNCI

1894.

MANCHESTER:
HERALD & WALKER, TYP., POOL FOLD CHAMBERS, OFF C
1895.

OFFICERS.

1895.

President:

SIR E. LEADER WILLIAMS, M.INST.C.E.

Past-President:

MR. THOMAS DANIELS, M.I.MECH.E.

Treasurer:

Trustees:

MR. G. CARTER,
" JOHN WEST, M.I.C.E.
MR. JAS. WALTHEW,
" T. ASHBURY C.E.

ALDERMAN SIR W. H. BAILEY, J.P.

Council:

MR. H. WEBB, J.P.
" J. BOLAS,
" F. W. REED,
MR. T. WOOD,
" C. FARMER,
" A. SAXON.

Librarian:

MR. J. GIBBON,

21, Wellington Terrace, Reddish.

Secretary:

MR. FRANK HAZELTON,

63, Barrett Street, Old Trafford, Manchester.

Half-Yearly Meeti

June 9th, 1894,

Mr. T. Daniels, M.I.Mech.E., Presiden

AMENDMENT OF RULE 1

The President briefly alluded to the vagueness of in Rule 13, and to the desirability of the wording l specific. In accordance, therefore, with the directic begged to formally propose

> "That, in Rule 13, the word 'sickness' be expu the word 'paralysis' be substituted."

The proposition was seconded by Mr. James W Messrs. John Taylor and Alfred Saxon, and passed un

---

ANNUAL MEETIN

8th December, 1894,

Mr. T. Daniels, M.I.Mech.E., President

The minutes of the previous meetings having been and signed by the Chairman, he announced to the mee ballot for the election of new members.

The election of President and other officers of the taken, with the result as set forth on opposite page.

> *Resolved unanimously.*—"That the cordial thanks of to Mr. T. Daniels, for the interest he has ta the Association, and the excellent manne discharged the duties attaching to the office the past two years."

Mr. T. Daniels, in briefly responding, sincerely than the hearty manner in which they had acknowledged h it was with considerable diffidence that he had accepte personally known all, except four, of the various preceded him since the Association was founded. unhesitatingly say that the duties of the office had be pleasure to him, and now on their conclusion he coul a happy and prosperous new year.

Annual Report of Council.

1894

The Council have pleasure in presenting the 39th Annual Report of Proceedings.

To the membership roll during the year have been added—

	1 Honorary Life Member.
	14 Honorary Annual Members.
	12 Ordinary Members.
Total	27

and after taking into account the loss by death and erasure, the total number of names of all classes on the roll amounts to 360, as against 350 in the previous year, namely:—

* 27 Honorary Life Members.
* 120 Honorary Annual Members.
213 Ordinary Members.

Upon reference to the Financial Statement as certified by the auditors (see appendix), it will be seen that the balance standing to the credit of the Association after payment of all accounts due up to the 31st December, amounts to £3,469. 3s. 6d., as against £3,324. 5s. 8d., at the close of the preceding year, thus showing a surplus of £144. 17s. 10d. on the year's working.

During the year the Council directed the attention of the members to the desirability of Rule 13 being more specific, and it was amended at the June meeting.

They are pleased to report that the payments to the superannuant members has been at the rate of 7/- per week during the year.

* Taking into account the transfer of two members from Honorary Annual to Honorary Life Membership.

The Council desire to express their appreciation of the generosity evinced by the contributors to the Kilgour and Roberts' Assistance Fund, details of which are subsequently appended. Such an appeal was probably the first in the history of the Association, but the Council believed that the cases were of such a character as to be worthy of consideration by the members.

It is with profound regret the Council have to record that during the year death has removed the following members, brief memoirs of whom are appended on pages 227 to 229. In accordance with resolutions, letters of condolence and sympathy have been forwarded to the families of the deceased members. In respect to Mr. Mainwaring, the late Treasurer, they desire to record their appreciation of the good and faithful services which he so unselfishly and continuously devoted to the work of the Association.

Dack, R.	Bolton.
Hick, J.	Do.
Mainwaring, H.	Manchester.
Malkin, W.	Do.
Mitchell, E.	Do.

The following gentlemen have ceased to be Members of the Association during the past year:—

Anderton, R.	Accrington.
Barlow, L.	Manchester.
Bebbington, P.	Do.
Corby, M.	Birmingham.
Eckersley, W.	Sheffield.
Farmer, A. W.	Salford.
Higgins, F. W.	Manchester.
Richards, G.	London.
Sykes, E.	Manchester.
Skewis, E.	
Wood, T.	Buenos Ayres.
Whitley, B.	Manchester.

The following gentlemen have been added to the Membership Roll during the past year:—

LIFE HONORARY MEMBERS.

Thom, W.	Blackburn.
*Adamson, J.	Hyde.
*Webb, H.	Bury.

* Transferred from Honorary Annual Membership.

Honorary Members.

Bailey, A. J.	Salford.
Butterworth, J.	Pendleton.
Beeley, T. C.	Hyde.
Craven, T.	Manchester.
Carter, F. H.	Do.
Creak, R. B.	Cheadle Hulme.
Donnelly, J.	Manchester.
Hewitt, C. J.	Prescot.
Hobson, J. E.	Cheadle.
Mortimer, H.	Blackburn.
Rowland, B. R.	Altrincham.
Saner, J. A.	Northwich.
Thom, W., Junr.	Bolton.
Wood, W. E.	Accrington.

Ordinary Members.

Collins, A.	Manchester.
Duff, E. J.	Do.
Gordon, J. T.	Stalybridge.
Horsfield, T.	Manchester.
Hilditch, T.	Heaton Chapel.
Ingham, J. R.	Rochdale.
Lefevre, E.	Cheetham.
Myles, J. S.	Altrincham.
Patrick, F. N.	Salford.
Sowter, G. H.	Wigan.
Wrigley, E. G.	Altrincham.
Wintour, F.	Manchester.

During the year 17 General Meetings of the Association have been held, 12 of which have been devoted to literary and business purposes, three to the inspection of works, and the remainder to Social gatherings. At nearly all the meetings the attendance of the Members has been so large, and their interest evinced in the proceedings so great, as to be in every way satisfactory to your Council. The following are the papers read and discussions held during the year :—

Papers Read and Discussions held during the Year.

13th Jan.—**Inaugural Address** by the President, Mr. Thos. Daniels, M.I.Mech.E., on "**The Silver question in relation to Engineering and estimating for Mechanical Work.**"

27th Jan.—On "**The Manufacture of Aluminium,**" by Mr. W. S. Sample, Patricroft.

24th Feb.—On "**Steel and its Manufacture,**" by Mr. Henry Webb Bury.

10th Mar.—Discussion on ditto.

14th Apl.—On "**Application of Machinery to the Manchester Trade,**" by Mr. Gilbert Lewis, M.I.Mech.E., Eccles.

27th Oct.—On "**The cost of Steam Raising,**" by Mr. J. Holliday, Dublin.

10th Nov.—On "**Modern development of the Gas Engine,**" by Mr. Jas. Atkinson, M.I.Mech.E., Manchester.

24th Nov.—On "**Prepayment Meters,**" by Mr. J. Nasmith, Manchester.

The Council, finally, congratulate the Members on the general success of the Association proceedings during the year, and tender their cordial thanks to those gentlemen whose co-operation has enabled them to achieve this result. In this respect, the Council direct the attention of the Members to the great courtesy and hospitality evinced by the firms of Messrs. T. Firth and Sons and Messrs. Walker and Hall, during the visit to Sheffield.

Similarly, to Mr. T. P. Hewitt, Mr. C. J. Hewitt, and the Directors of the Lancashire Watch Factory, the Council express their thanks for the courtesy shown during the Association's visit to Prescot, when the members were enabled to inspect a department of engineering not hitherto presented to their view.

THE
KILGOUR AND ROBERTS ASSISTANCE FUND.

The Council, during the year, had under consideration two very exceptional cases of distress of two members of the Association, viz., Mr. Robert Kilgour, of London, and Mr. W. J. Roberts, of Bristol.

Mr. Kilgour was stricken with *Angina Pectoris*, which practically incapacitated him from ever again following any employment. Mr. W. J. Roberts was suffering from mental weakness, through overwork, and his medical advisers officially certified that his recovery was hopeless unless he could take a long sea voyage.

The Council very carefully and exhaustively investigated the applications in respect to them bearing on Rule 13, but were reluctantly compelled to come to the conclusion that they were not such as would entitle them to assistance from the funds of the Association.

Although the Council were unable to officially assist these members, they felt strongly that under such sorrowful circumstances something was due voluntarily from the members of the Association. They therefore deputed a Sub-Committee to make a formal appeal to the members for their sympathy and support in the direction indicated.

The cases were laid before the members, by special circular, on the 20th Nov., and on the 20th Dec. the proceedings of the Committee were concluded by the issue of the subjoined circular-letter which was forwarded to each subscriber:

DEAR SIR,

The Kilgour and Roberts Assistance Fund.

With reference to the above Fund, the Sub-Committee beg now to report that the total amount subscribed was £70. 15s. 0d. In accordance, therefore, with the intimation on the preliminary circular, the sum has been evenly divided between the Two Members, remittances respectively for £35. 7s, 6d. having been forwarded to Mr. R. KILGOUR and to Mr. W. J. ROBERTS.

In conclusion, the Sub-Committee sincerely tha
response to their appeal on behalf of these two c
most gratefully acknowledge the assistance you hav

We, remain, yours faithful

T. DANIELS, *Past-*,
J. WALTHEW, *Tru*
T. ASHBURY, ,
F. HAZELTON, *Sec*

THE MANCHESTER SHIP

CONGRATULATORY RESOLUTIO

At the January meeting of the Associatic was made to the recent opening of the Man for traffic. Mr. Thomas Ashbury, referrin completion of the above undertaking, said long been contemplated. Thirteen years ago Presidents, in his inaugural address, had r from Manchester to Liverpool as a "possibil now it was an accomplished fact, and he (l sidered that it was no more than a matter of Association, as a body of engineers, to offer th to the directors of the scheme, especially whe the fact that several of their own member important and memorable part in connection ment and construction of the Canal. He tl move the following resolution:—"That the ciation of Engineers, at this, the first meet cordially tender to the chairman and directors Ship Canal their heartiest congratulations on Ship Canal was opened successfully through traffic on January 1st, 1894, and in this recognise with much satisfaction the invaluabl in the achievement of so great a triumph by se esteemed members, notably Messrs. the late and Richard Peacock, the present Mayor of Bailey, C. J. Galloway, and the Engineer-in Williams." The proposal was seconded by Mı and, after a few remarks by Mr. A. Saxon a was unanimously adopted.

ANNIVERSARY DINNER.

The Thirty-eighth Anniversary Dinner of the Association was held on Saturday, the 10th February, at the Grand Hotel. There was a large attendance of the members and their friends, and the gathering was presided over by Mr. T. DANIELS, President of the Association.

After the toast of "The Queen and Royal Family" had been honoured,

Mr. H. WEBB (Bury) proposed "Our Municipal Corporations."

The Mayor of Salford (Mr. Alderman BAILEY) with whose name the toast was coupled, referred to the great work that had been and was being done by our municipal rulers. Manchester, he said, was a triumph of municipal government; "and so is Salford," he added, amidst much laughter. The city and borough were really one community, although they were under two mayors, and he hoped they might long continue to enjoy all the benefits which good municipal government could confer.

In the absence of the Lord Mayor of Manchester (Mr. Ald. A. MARSHALL), who wrote at the eleventh hour expressing regret that he was unable to attend, Mr. Councillor SAXON replied on behalf of the Manchester Corporation.

The Secretary (Mr. FRANK HAZELTON), in accordance with custom, read the Annual Report, from which it appeared that the Association is in a flourishing condition.

Mr. H. J. ROBY, M.P., proposed "Prosperity to the Manchester Association of Engineers." He said he had been wondering why he should have been asked to propose this toast. It certainly could not be because of any analogy between his occupations and those of the members of the Association. In parliament they were engaged in working with the utmost friction and producing the least possible result, whereas, fortunately not only for the credit but for the comfort of England, engineers were engaged in working with the least possible friction and producing very excellent results. Although he knew little of engineering, he greatly admired the work of the

engineer. We had lately had a gigantic engineering work carried out at our own doors, and they had with them that night two gentlemen whose names would ever be associated with that undertaking, viz., Mr. Abernethy and Mr. Leader Williams. (Applause.) He knew of no enterprise in his time which had excited so much enthusiasm, and which had been characterised throughout not merely by great skill but by indomitable perseverance and endurance on the part of those associated with it. (Applause.) But when he looked on the bridges on the Ship Canal at Barton he thought that possibly there might be a further field for engineers to conquer, that of giving an artistic beauty to the useful and the strong. (Laughter.) He did not know that it was a very easy task to carry one canal over another; he was very far from insisting that it had not been done as successfully and as beautifully as it could be, but he could not but hope that there might be in course of time shareholders who would demand that works should be as beautiful as well as useful, and in that case he had not the least doubt that the ingenuity of the engineer would be capable of answering that purpose as well as others. (Applause.)

The Chairman, in reply, said the Association did its best to keep in advance of the times in mechanical engineering; it did its best in the way of instructing the members in the scientific and commercial sides of their profession. He urged the importance, in the interests of engineers, of the markets of the world being increased. Civilisation, he playfully observed, must be expedited by Maxim guns. It might be a cruel process, but it must be done; trade must go on, commerce must be extended. And if by these means the requirements of the trade and commerce of the world could not be met, there was nothing for it but to adopt bimetalism. (Laughter and applause.)

Mr. T. Ashbury proposed "The Engineering Profession," and coupled the toast with the names of Mr. James Abernethy, consulting engineer to the Ship Canal, and Mr. W. J. Crossley, one of the directors of the Ship Canal Company.

Mr. J. Abernethy, who was received with loud applause, referred in his reply to the first visit paid to him in London by Mr. Daniel Adamson, the original projector of the Ship Canal,

and said he was very much impressed by Mr. Adamson's personality, and still more by his strong conviction of the great benefit that would accrue to Manchester and the surrounding district by the formation of a waterway to the city. Afterwards, when the time came to determine between two plans, he had no hesitation whatever in concurring in the advice of Mr. Leader Williams, and he reported to that effect. And now the great commercial district of which Manchester was the centre was an important seaport. The construction of the canal would for all time reflect great credit on the enterprise of those who had been connected with it. They had from Runcorn to Manchester not only a canal, but a huge dock connected with many canals, and he had no doubt they would soon have additional railway communication with the canal, to the advantages of the railway companies. Speaking as a shareholder, he had very great confidence indeed, from his knowledge of the Ship Canal, and particularly of all the collateral advantages attendant upon it, that it would eventually prove remunerative to the shareholders. (Applause.) And it would certainly prove valuable in the way of enabling the industries of this district to meet the constantly increasing competition of foreigners. (Applause.)

Mr. W. J. Crossley also replied. Referring to Mr. Roby's criticisms on the art employed in the Ship Canal, he said that, while he quite agreed with Mr. Roby that beauty ought to be considered, the engineer had to go straight to his work, and could not consider curves of beauty unless they could be obtained consistently with going the straightest road and making the bridge the best possible bridge for its purpose. As he glanced back over the history of the canal, one thing that struck him was the way in which different men with different qualifications were raised up to perform their functions. He thought they would all agree that it needed the power of Daniel Adamson to get up the enthusiasm required to carry the bill, but when he did that his part of the work was done. He was, unfortunately, not possessed of that financial tact and financial knowledge which was necessary to get round the London bankers. It needed Sir Joseph Lee to do that. With his great tact and remarkable business ability, Sir Joseph Lee succeeded in getting

the money. With all the engineering sk
canal would never have been built if it h
Joseph Lee. (Applause.) And then when
unhappily, stricken down by sickness, it ne
mastery of detail and the power of insis
Bythell—whom none could appreciate so m
had worked with him—to conduct all thes
the Corporation which were such an absol
success of the enterprise. And then ther
who, with the strength of his mind and th
in his own judgment, was able to help in ca
Corporation loan.—he meant Sir John Harw
All praise to Sir John Harwood for his plu
Then came the engineer, but for whom all t
got would have been of no use. Thanks to
and earnestness, the work had been complet
had not got a strong, healthy constitution co
troubles and the trials that had fallen on Mr
devoted shoulders, and, looking upon him t
glad to see that he had come through th
injury. (Applause.) England was proud of
there names were handed down as household
to son. England would yet be proud, if s
proud, of Leader Williams. She knew h
leading engineers, and he had not the slighte
Leader Williams would be no exception whe
came. (Applause.)

Mr. S. Dixon proposed "Our Guests," and

Mr. F. Monks and Mr. Marshall Stev
latter, in the course of his remarks, took
utterance to a note of warning to the
Manchester district. He reminded them t
matters of mechanical engineering of any im
on the construction of the Ship Canal—
pontoons and to another work—were the
engineers. Let the Manchester engineers n
in praising the Ship Canal, but go in and be
was no end of things yet to be done in o

undertaking. Grain silos, storage warehouses, floating warehouses, petroleum tanks, and many other things were needed. He was told by Mr. Ashbury that the mechanical engineers were coming to Manchester this year to hold their meeting. Do not let them come here and find all this field open to them; let the Manchester engineers go in for the work now and take advantage of a great chance such as did not come every day. (Hear, hear.)

Mr. J. Craven proposed "The Manchester Association of Students of the Institute of Civil Engineers."

Mr. E. Leader Williams, in reply, spoke of the good work that Association is doing. With regard to the Ship Canal, he disclaimed the too kind things that had been said of him, and spoke of the assistance he had received in his work from Mr. Abernethy (who had probably more practical knowledge of docks and locks and lock gates than any living man,) and also the valuable assistance he had received from the members of his own staff.

The last of the long toast list was "The health of the Chairman," which was duly honoured.

At intervals during the evening an interesting musical programme was gone through by a glee party consisting of Messrs. J. H. Greenwood, Blacow, Maltby and Griffiths.

LIBRARY.

The following new books have been purchased and added to the Library:—

Chordal's Letters.	
Corliss Valve Gear.	Henthorn.
Corliss Engine.	Thurber.
" "	Uhland.
Constructor, The	Reuleaux & Supplee.
Gas, Air, and Oil Engines.	Donkin.
Injectors.	Pullen.
Prehistoric Iron.	
Teeth of Wheels.	Robinson.

The Council have pleasure in acknowl
donations to the Library :—

PRES

Cotton Mill Construction. E
Indicator, The.
Patents, Trade Marks, and Designs.
Practical Engineer Pocket Diary.
Slide Rule, The.

The Association exchanges Transactions wit

American Institute of Mining Engineers.
,, Mechanical Engineers.
Canadian Society of Civil Engineers.
Engine, Boiler, and Employers' Liability Ins
Franklin Institute, America.
Institution of Civil Engineers of England.
,, Engineers and Shipbuilders in
,, Mechanical Engineers.
,, Civil Engineers of Ireland.
Iron and Steel Institute.
Liverpool Engineering Society.
Manchester Geological Society.
,, Literary and Philosophical Societ
Midland Institute of Mining, Civil, and Mech
Mining Association and Institute of Cornwall.
Mining Institute of Scotland.
National Boiler Insurance Co.
North of England Institute of Mining and Me
North-East Coast of Engineers and Shipbuild
Philosophical Society of Glasgow.
Royal Scottish Society of Arts.
South Wales Institute of Engineers.
Society of Engineers.

The following Publications are received p

Colliery Guardian.
Electrical Review.
Engineer.
Engineering.
Industries and Iron.
Iron and Steel Trades' Review.
Marine Engineer.
Mechanical World.
Practical Engineer.
Textile Mercury.
,, Recorder.

OPENING OF SESSION.

The 39th Discussion Session was inaugurated on Saturday, October 13th, when, by permission of the Manchester Corporation, about 150 of the members were conducted over the Corporation Electrical Works and the Hydraulic-power Station —over the former by Mr. C. H. Wordingham, and over the latter by Mr. F. M. Evanson, the respective departmental engineers.*

Subsequently, the members had tea together at the Grand Hotel, and a social gathering was afterwards held, at which some interesting mechanism was exhibited relating to electrical engineering. During the evening Mr. T. Daniels, President of the Association, took the opportunity of thanking the various Committees of the Corporation for granting them the privilege of inspecting the works, and he also spoke of the syllabus for the coming session as being a most interesting one. Proceeding, he referred to the state of trade, and he said they had still to regret that they were not able to make good dividends. They all knew that the reason for the present bad trade was that they could not get the silver question settled. He was one of those who was hoping that the war between China and Japan would cause some more trade. (Laughter.) He confessed at once that his sympathies were with Japan. During the last ten years his firm had sent £125,000 worth of machinery to Japan, and a good many manufacturers round about Manchester had done the same thing. It was no use in these days mincing matters; they must go in for supporting those who were of the greatest benefit to them. Since their last meeting, the President went on to say, when they advocated the cause of conciliation, they had seen the formation of conciliation boards which were doing a great deal of good, especially for the colliers. At all events, the question of a minimum wage had been settled, and he did not see any objection to it, nor why there should not be a minimum wage in Scotland as well as in Lancashire. But these matters would probably be considered at future meetings. That

* For details of these works see Appendix.

night they were more particularly interest
hydraulic power. A few years ago the gr
day with them were wind pressure on the
pressure on the water wheel; then came
and other kinds of motive power, but now t
electrical age. Instead of talking about h
now to speak of volts and amperes and
(Laughter and hear, hear.) They had tha
chester plant, which was acknowledged to
installations in Great Britain. Water po
grand thing, no doubt, for the city, but he c
ing that this extension of hydraulic power w
the makers of direct-acting pumping engines
if it was their fate to be overwhelmed by t
supply, they must accept the inevitable.
conclusion, say that many members of t
noticed that day that much of this hydrauli
was made at Chester and some in Lincolnsh
in the extension of the plant more Manchest
have a chance. (Hear, hear.)

Mr. T. Ashbury, who proposed a vote of
Wordingham and Evanson for their courtes
noon, said it seemed to him that centralisati
the day. There was no doubt at all tha
advantage. At all events, thay had seen tha
of hydraulic power was appreciated by the o
warehouses in the city.

Mr. J. Nasmith, in seconding the proposa
that was not the time for passing criticis
had seen, he did not think that, perfect a
deserved all the compliments given it durin
the Mechanical Engineers. Centralisation
but in dealing with a current like electricity,
in view of the cost entailed, its supply cou
competition with gas. Gas was not going t
might depend upon it that the gentlemen co
industry were going to make a tough fight o

Mr. E. G. Constantine, who supported the motion, said he could not agree with the view expressed by their President as to the war between China and Japan. He thought the engineers of this country had had about as much from Japan as they were likely to have. The Japanese, as they all knew, were extreme copyists, and as one who had studied the question, he could tell them that the Japanese were exporting machinery to China which, for all purposes, was quite as good as the machinery to be obtained from England, and at half the cost. The Japanese were learning to produce manufactures as well as we could make them. and they had certain markets nearer to them than they were to England. What, in his opinion, they must hope for was a trade with China. China was being pretty well beaten, and he thought that sufficient had been done to convince China that it was quiet time her rulers adopted Western methods. The sooner they did that the better it would be for England, for although the Germans had a pretty good hold in China, there were a number of Englishmen in the country who would use their utmost efforts to send trade to this country. China had had an object lesson during the present war, in being in a state of unpreparedness, which could not but do good all round. (Hear, hear.)

The resolution was carried with acclamation, and Mr. Wordingham having briefly responded, Mr. Evanson also thanked the company for their vote and welcome. He must, he said, take exception, however, to the remarks of the President as to the makers of direct-acting pumps suffering from this supply of hydraulic power which had been inaugurated by the Manchester Corporation. He remembered when the power was first given to the citizens of London there was the same feeling. But it did nothing of the kind, for whereas many makers of pumps might here and there have lost orders for this kind of machinery, they got, on the other hand, orders for lifts and elevators, and that class of work which they would never have done had there not been the motive power at hand to work them. Another great advantage of this supply of power was that it was economical. Boiler and engine space was a very important question with those who needed power of this kind; and was

there not also the sanitary question to be considered? Was not this supply of hydraulic power doing something to mitigate the smoke nuisance? So far as it had gone, this hydraulic power supply in Manchester had been very successful. He knew its history in London and in Liverpool, and he could tell them that during the first six months' working in Manchester they did far better than the London or Liverpool companies did in 12 months. (Applause.)

OBITUARY.

ROBERT DACK was elected an Ordinary Member of the Association in December, 1891. He received his business training with Messrs. Nasmyth, Wilson, & Co., Patricroft, his last position being that of Manager to the Bolton Engineering Company. He died in September, 1894.

Mr. JOHN HICK, J.P., was one of the founders of the firm of Hick, Hargreaves & Co., Soho Ironworks, Bolton. He was born at Bolton, 2nd July, 1815, and when quite young took an active part in the management of the Soho Ironworks. Besides making himself familiar with mechanical engineering operations in all their details, he studied civil engineering, and became a member of the Institute of Civil Engineers. On the death of his father in 1842 Mr. Hick was joined in the management of the works by the late Mr. William Hargreaves, the latter ultimately becoming head of the firm.

Mr. Hick filled various public positions in his native positions, and represented the borough in Parliament from 1868 until 1880, when he retired. One specially important service rendered to the community during his parliamentary career was the development of legislation intended to secure greater safety in working steam boilers, and preventing explosions as far as possible. The question was brought before the House of Commons, and in May of 1870 he secured the appointment of a select committee to inquire into the subject, and as to the best means of preventing explosions in steam boilers. Mr. Hick was appointed chairman of the committee, whose investigation extended over two sessions. In their report the committee made certain recommendations with the view to securing greater safety from steam boilers, one of their suggestions being in favour of periodical inspection, but they were not prepared to recommend the adoption of any plan founded upon the system of compulsory inspection. It was in August of 1871 that Mr. Hick introduced a measure in the House of Commons "to provide a more efficient remedy to persons injured and property damaged by the explosion

of steam boilers through negligence." He also served on a select Committee of the House, appointed in 1874, on the question as to the best chain cables and anchors for the Navy; and amongst other matters to which he drew the attention of Parliament was the importance of the British army being provided with the most effective rifle, and the improvement of the heavy ordnance. On the occasion of the visit of the Prince Consort to Dean Mills, Bolton, in 1857, Mr. Hick minutely explained to His Royal Highness the working of the fine engines, and other mechanical operations there. Of his labours in connection with the improvement of steam engines for cotton mills it is unnecessary to speak in detail; the work of Hick, Hargreaves & Co. is to be found in every country where fibre is spun or fabrics woven.

He was elected a Life Honorary Member in 1873.

Henry Mainwaring, the late Treasurer, died on the 18th December, 1894. He had been in declining health for the past twelve months. Recently, however, rest and cessation from business had apparently so recuperated him that he attended at the last annual meeting, held on the 8th December, and once more briefly returned thanks to the members for again electing him to the treasuryship, a position to which he had been continuously elected for the past 26 years. It was thought then by his more intimate co-workers that he showed signs of renewed health and strength and of a fair recovery from his indisposition. Unfortunately these pleasing anticipations were not to be realised, as within a short time of his so responding he took suddenly ill and passed quickly away.

He was born on the 21st November, 1824, at Chester. On the 8th October, 1836, he was articled with Messrs. Hugh Hornby and Joseph Birley, cotton spinners, manufacturers, and ironfounders, Manchester, serving his apprenticeship with them for seven years as an ironmoulder. In 1845 he and a Mr. Price commenced business on their own account, trading under the name of Mainwaring and Price, at a small place in St. James' Street, Manchester. Afterwards the business was removed into Faulkner Street, and from thence into Mounsey Sreet. Subsequently the partnership was terminated, and Mr. Mainwaring retained the latter place to the end, trading as brass founder, brewer's engineer, &c.

He joined the Association as an Ordinary Member in 1859, and in 1862 occupied the presidential chair. He was appointed Treasurer of the Association in 1868.

Although quiet and unassuming, he was very determined where requisite, and his integrity of character and single-mindedness of purpose in all matters appertaining to the Association were such as to elicit the highes

respect and esteem of his colleagues. He was a Fi
Master, and in fact was the oldest member of his lod

Mr. Mainwaring was of a sympathetic and generoı
many instances, unostentatiously, he held out a helpi
friends who had been less fortunate in the world tl
quietly interred on the 22nd December, at Brookl
presence of many of his old friends and officials of th

William Henry Malkin was elected an Ordinaı
1884. He served his apprenticeship as a fitter with M
tool makers, Salford, and subsequently went into
account as brass founder and finisher. He died on
the 45th year of his age.

Edwin Mitchell was elected an Ordinary Memb
His last appointment was as foreman moulder witl
Brooks, Doxey, & Co., Gorton. He died 6th August,

REPORTS OF EXCURSIO

VISIT TO SHEFFIELD.

The first of a series of summer visits of the Asso
Thursday, June 14th, when upwards of 100 member
the purpose of inspecting—first, the extensive steel wo
and Sons Limited; and secondly, the electro works c
Hall.

Consequent upon the recent opening of the new Dore
route was selected, with the object of affording the me
of surveying its general features. Through the ager
(the Manchester representative), the Midland Railway
placed a special saloon train at the Association's
Manchester at 9-55 a.m.

On arriving at Sheffield the members, who w
Mr. Thomas Daniels, the president of the assoc
several representatives of Messrs. Thomas Firth
once proceeded to the Norfolk Works, the i
occupied the principal portion of the day. The
the iron wharf, where many thousands of tons
of Swedish iron were shown in stock. The conv
next visited, and then the large crucible foundry whe
the members of the association, several casts were r
ingots for working up into bars and sheets, and also

manufacture of locomotive crank pins, &c. The party then proceeded to the Siemens foundry, where a large 30-ton ingot was cast, to be afterwards forged into a gun tube. In this foundry are two furnaces of 30 tons capacity each, with a smaller one of 10 tons, and the party also noticed the arrangements for moulding steel castings up to the largest sizes, and the drying stoves, &c. Afterwards the rolling mills and forges were visited, also the paring shops, where the sheets are cut to the required dimensions and carefully examined. Then the warehouses, where all bars are looked over, and bundled and packed ready for shipment. The inspection of the light department having been completed, the party were invited by Messrs. Firth to a luncheon in their works. Mr. Bernard Firth occupied the chair, and, on behalf of the firm, expressed the pleasure which it gave them to see so large a gathering of representatives of the association. It was pleasing to see in the present day the close communion between the users and manufacturers of material, and it was with the object of promoting this that they tried to look up their friends whenever it was possible.

Mr. Thomas Daniels, the President of the Association, said that if there was a place which Manchester men liked to visit it was Sheffield; the Midland Railway Company had done a great deal to encourage the trade of that district, and they had that day the privilege of coming over their new Dore and Chinley line, which greatly shortened the route on that line between two such important centres as Manchester and Sheffield. The members had been very greatly interested in what they had seen during the morning in Messrs. Thomas Firth and Sons' works, and they were deeply indebted to them for the facilities they had provided for gathering what he was sure would prove very valuable information in connection with the manufacture of steel.

Mr. Henry Webb, in seconding the motion, said he was pleased that Messrs. Firth first conducted them to the stock room, because there they saw the Swedish pig iron and the Carnforth hematite, which was a guarantee of the soundness of the ultimate product. Everything he was glad to say was modern—namely, the crucible process, the Siemens-Martin process, and last, but not least, the famous forging press, all of which plainly indicated to them that the Firths were marching on with the age, and that with such enterprise Englishmen would hold their own with their competitors.

Mr. J. R. Hoyle, the managing director, expressed his pleasure at hearing the remarks of Mr. Webb, and said that it could hardly fail to be pleasing to the president, in his connection with Messrs. Nasmyth, Wilson & Co., of Patricroft, of steam hammer fame, to see the large extent the hammers of that firm were used at the Norfolk Works, notwithstanding the introduction of the hydraulic press. The very word Nasmyth seemed to be dotted about the works, and he had no hesitation in saying that the possession of those hammers, especially the two 25-ton type, had made a substantial increase to the pockets of Firth and Sons during the past thirty years. At that time it was thought that Mark Firth was making a huge mistake in putting down such monsters, but time had proved the foresight of that gentleman. To-day

the hammers were practically as good as when th
down. In these modern times, when they had to deal
they could use the hydraulic forging press more effecti
the last to say a word against the steam hammer.

After luncheon the hydraulic forging press shop wi
shop is 250ft. by 200ft., and contains, in addition tc
press and its engines and pumps, a powerful dupl
working the accumulator, which serves the hydraulic c
drawing appliances; besides very powerful machines
and sawing heavy ingots. An ingot was forged in
members; this ingot, which was intended for a shaft
weighed 30 tons, and was reduced from the diame
in the course of about half-an-hour. Several large c
these works, amongst others a number of sets of heavy
cylinders, &c., for hydraulic work. The party then
works, and saw one of the large 30-ton Nasmyth ha
together with similar ones of 12, 7, 5 and 3 tons;
furnaces, one of which is 42ft. long by 7ft. 6in. wide
70 tons of forgings at a time; the large oil tempering
60ft. long and 50 tons in weight can be heated to the
and within the space of one and a-half minutes withdr
and plunged into a tank of oil over 60ft. deep by 6ft. 6i
machine shops with turning and boring lathes capable
lengths up to 50ft., and weights up to 50 or 60 tons. A
in this shop were a large quantity of marine shafts and
some of the latter being accurately finished to within a
millimetre; also a large number of armour-piercing p
states of completion and a number of finished shell
proof penetrated plates against which they were tested
alteration in form.

The inspection of the Norfolk Steelworks having
party were conveyed in carriages to Messrs. Walker
and cutlery works, in Howard street, one of the largest
kind in the country, and in ordinary times giving
1,200 hands. Here they were received by members
ducted through the various departments of the works,
were much interested in the various processes, especi
turning-room and spinning-wheel, where goods are t
shapes for silversmiths to put together, and the stampi
where endless varieties of patterns in various articles
in steel dies, of which there are over 300 tons in the w

On the conclusion of the inspection the members adj
cliffe Hotel, where tea was served, and at which were p
of the two important firms who had entertained the
expressions of appreciation to Messrs. Firth and Messrs
the proceedings, after which the party was convey
train to Manchester

VISIT TO LIVERPOOL, VIA SHIP CANAL.

The members, who during the process of construction have made systematic inspections of the Manchester Ship Canal, completed the series by finally journeying the entire route on Saturday, July 14th. Upwards of 200 members and ladies were present, for whom the council had specially chartered the steamer "Daniel Adamson," which easily made the journey to the Prince's Landing-stage in four and a half hours. Subsequently tea was served at the Bear's Paw Restaurant, under the presidency of Mr. T. Daniels, after which the party returned to Manchester by a special express train.

VISIT TO PRESCOT.

On Thursday afternoon, September 13th, the Watch Factory, Prescot, was visited by 80 members of the Association, accompanied by the President, Mr. T. Daniels. Amongst the party were a number of ladies. They were received upon arrival by Mr. T. P. Hewitt, Mr. C. J. Hewitt, Mr. Jas. Hewitt and Mr. Wood, and after forming groups of a dozen each the party were conducted over the works and shown the operations in the various departments with all of which they were greatly pleased.

The industry of watchmaking was first introduced into England during the Commonwealth, nearly 250 years ago, and the trade seems soon afterwards to have been established in Prescot, and to have progressed concurrently with the development of the watch itself. All the other centres of watch-making in England, including London, Coventry, Birmingham, and Liverpool, have been dependent on Prescot makers for the foundation of the watch, called the movement, which consists of the frames, barrels, fusees, detent works, indexes, silver pieces, wheels, pinions, ratchets, springs, &c. Besides the movements, other branches of watchmaking were carried on in Prescot, such as the manufacture of balances, hands, rollers, levers, pallets and wheels, verges and motions. Ships' chronometer movements have likewise been manufactured here, and watch-tool making had its seat in the locality.

The buildings of the Lancashire Watch Co., which was established in 1889, occupy a rectangular plot of ground of about 11½ acres. When completed the front building will be 440ft. long by 28ft. wide, and four storeys high, the central portion forming the administrative department. Behind the whole length of the building, and separated from it by areas for light, will be the main works corridor, 20ft. wide, from which the different workshops will be entered. The latter will be placed with their length at right angles to the corridor, and are intended to be seven in number—the outer will be three storeys in height, and the inner one storey. The rear of all the workshops is intended to be connected together by a rope-race for the transmission of power by cotton ropes, the areas between the workshops being approached through archways. The steam engines, boilers, and electric-lighting plant are intending to be in the centre of this rope-race.

The buildings already completed consist of one c
workshops and two of the one-storey inner shop
300ft. by 260ft., and having a total floor area of 59
three-storey workshop is 300ft. long by 28ft wide.
workshop is 336ft. long by 100ft. wide, a portion
porarily divided off for the present engine and boil
The smaller one-storey workshop is 256ft. long and
offices are contained in what will ultimately be the n

The side walls of all the workshops are constructed
filled in to a height of 3ft. above each floor with b
with glass in wood frames, so that continuous wi
whole length of each side. The ground floors are so
of ballasting and a layer of Portland cement concrete
fireproof, with steel girders supported on cast-iron
storey workshop has an ordinary slated roof, but th
have saw-tooth shed roofs, with large skylights facin
air propellers are used for ventilation, and the outle
induced-current kind, preventing down draught. Th
throughout by steam, generated in a boiler 30ft. by 8

The motive power is provided by a locomotive t
140lb. pressure, and supplying steam to a Marshall co
of developing 80 horse-power, from which the variou
cotton ropes working in iron grooved pulleys. Th
throughout, and the belt pulleys, being made in
anywhere.

The work benches have wood tops 2½ft. wide,
standards, which are secured to the floor boards and
of bench tops is 14,480 square feet. Gas is used at

The smaller one-storey workshop is used for m
joiners' shop and smithy partitioned off at one end.
dation for about 100 mechanics. The larger on
employed in the making of watch movements, wit
about 600 workpeople. The first floor of the three-sto
the flat steel and stem-winding departments; the se
jewellery, gilding, escapement, and balance making;
assembling room, and dial and hand making. Th
space for the employment of 700 workpeople. The
ground floor. The factory as it at present stands pr
for at least 1,500 workpeople, and turns out now a mi
watches a day.

At the close of the inspection the party adjourne
Assembly Room, where a substantial tea was served b
of the Royal Hotel. Mr. Daniels presided, and ther
T. P. Hewitt, Managing Director; Mr. C. J. Hewitt, W
Hewitt, Secretary; Mr. A. A. Menzies and Mr. J. W.
of Directors; Mr. W. L. Hindley, Manager of the S

J. Wood, Assistant Secretary; and Mr. J. Robinson, Foreman.

Mr. DANIELS, addressing those present said he was sure they had all been delighted with the very pleasant afternoon they had spent. (Cheers.) They had been highly favoured in getting through the Lancashire Watch Factory. From what they had seen he was sure the Watch Company at Prescot could hold their own with any manufacturers either in America, Switzerland or Germany He was very pleased it was so, because some people tried to make out that John Bull was fairly out of it, but if other communities did as they had done in Prescot, it would be a long time before John Bull was played out—(Cheers)—if they could bring their intellect and knowledge to bear in all matters as they had done in the past. They had seen some beautiful machinery that day, and its accuracy was wonderful, and that was the main point. The factory did credit to the gentlemen who had the management of the works, and to the mechanical ingenuity they had displayed in the invention of the machinery, which was something surprising. They had seen much to admire, and he had great pleasure in proposing a hearty vote of thanks to the gentlemen who had been kind enough to invite them to such a treat, and especially to Mr. T. P. Hewitt.

Mr. ASHBURY, in seconding the motion, remarked that a writer had said that genius was simply the perfection of detail. They must all have been struck with the admirable fact of the perfection of detail in the machinery they had that afternoon been looking at, and they as mechanical engineers appreciated all the thought, skill, and talent that had been brought to bear by those who had designed the machinery. The minute articles of machinery they had seen that day were something wonderful. Mr. T. P. Hewitt had a fertile brain and accurate resources that had caused him to devise so many excellent and valuable labour appliances. The Prescot Watch Factory could be called the most complete watch factory in existence, and he hoped it would go on successfully.

Mr. WEBB, J.P., Bury, supported the motion and said that he never went through a place where the girls were so well dressed and so well cared for in the matter of cleanliness, ventilation and the general arrangement of the works.

The motion was carried with acclamation.

Mr. T. P. HEWITT, in acknowledging the vote of thanks, said he could not help but thank them very sincerely for the very kind remarks that had been made The company had certainly been confronted with many difficulties in the introduction of the system of manufacturing watches by machinery, but these were being rapidly surmounted. He hoped that in a very short time they would employ between 2,000 and 3,000 hands. They were alive to all improvements and anxious to make every improvement in the machinery because they believed as managers, the greater perfection they got in the machinery the greater demand there would be for labour. It might seem an anomoly, but it was so. (Hear, hear.)

Mr. RABY and Mr. MENZIES also replied and the proceedings then terminated, the visitors returning home by the 8-15 train from Rainhill.

Treasurer's General Cash Account, for Year ending 31st December, 1894.

Dr. (Including Superannuation Fund Account.) **Cr.**

1894.				£	s.	d.
Jan. 1.	To Balance as per last Report			3324	5	8
Dec. 31.	„ Contributions and Entrance Fees			581	10	6
	„ Transactions—sold			10	0	2
	„ Interest from Loans in Building Societies	£11	18	4		
	„ „ „ Mortgages on Properties	84	14	9		
	„ „ „ Bank	3	10	8		
				99	18	4

1894.					£	s.	d.
Jan. 1.	By Rent—Grand Hotel				20	0	0
to	„ Secretary's Salary	40	0	0			
Dec. 31.	„ Librarian's „	10	0	0			
					50	0	0
	„ Superannuation Allowance				106	12	0
	„ Printing, Stationery and Bookbinding				176	5	0
	„ Books purchased for Library				6	14	1
	„ Insurance premium on Library				0	6	0
	„ Thirty-eighth Anniversary Dinner				16	1	0
	„ Audit and Committee Expenses, Postage and Petty Cash and Expenses in connection with Social Meeting				77	7	1
	„ Funeral Allowances:—Mr. W. Malkin	£10	0	0			
	„ E. Mitchell	10	0	0			
	„ R. Dack	10	0	0			
					30	0	0
	„ Expenses re paper "Cost of Steam Raising"						

Audited and found correct,

T. SETTLE,
R. R. LISTER } Auditors.

Superannuation Fund Account, for year ending 31st December, 1894.

Dr. (Included in General Account.) **Cr.**

1894.		£	s.	d.	£	s.	d.
Jan. 1.	To Capital invested as per Resolution passed at the Half-yearly Meeting, 14th June, 1879 ..	2100	0	0			
	,, Additional Capital voted at the Annual Meeting, 13th December, 1884	300	0	0			
	,, Additional Capital voted at the Annual Meeting, 12th December, 1891	600	0	0			
					3000	0	0
	,, Balance from last Report				16	1	1
Dec. 31.	,, Twelve Months' Interest on Capital Invested as per General Account				99	18	4
					£3115	19	5

1894.		£	s.	d.	£	s.	d.
Jan. 1. to Dec. 31.	By Superannuation Allowance:— Mr. John R. Wolstenholme ..	15	12	0			
	,, Fred Meixner	18	4	0			
	,, George Vickers	18	4	0			
	,, William Holmes	18	4	0			
	,, John Dutton.....	18	4	0			
	,, James Scholfield	18	4	0			
					106	12	0
	,, Balance to credit of Superannuation Fund Account				3009	7	5
					£3115	19	5

Audited and found correct,

T. SETTLE,
R. R. LISTER, } AUDITORS.
F. WALTHEW,

7th January, 1895.

APPENDIX.

VISIT OF THE ASSOCIA

TO THE

MANCHESTER CORPORATION ELE

AND THE

MANCHESTER HYDRAULIC POW

Saturday, 13*th October*,

DESCRIPTION OF V

Electric Works.

The whole of the works were designed and their erection superintended by Dr. J. Hopkinson, F.R.S. The system employed is the five-wire direct current, with feeders.

The works cover an area of 52,000 square feet, and are surrounded on three sides by the Rochdale Canal.

The Boiler House is 76 feet × 40 feet, and is covered by a steel tank of unique design. It is formed of eight steel girders, on the bottom flanges of which are riveted boiler plates, the ends of the seven bays thus formed being closed in by cross girders.

Coaling Stage.—This is midway between the tank and the boiler floor. Coal is received in barges, and is hoisted by means of an electric traveller, the gantry running along the range of hoppers which feed the stokers. Coal is stored in barges in the canal arm.

Mechanical Stokers of the "Vicars" type are employed on all boilers.

Boilers.—These are six in number. They are of the "Lancashire" type, and are of steel. Each contains six Galloway tubes. Leading dimensions, 30 feet long, 8 feet diameter, grate area 35 square feet.

Flues and Chimney.—The main flue at the back of the boilers is 8 feet × 6 feet. The gases pass from it into the stack through either or both of two economisers, or through a reserve flue between them. The chimney is 480 square feet at the base and 196 feet high.

Economisers.—These are of the "Green" type, and contain 288 tubes each.

Feed for Boilers.—There are three donkey pumps, each capable of delivering 34 gallons per minute, and three injectors delivering 34 gallons per minute. They deliver into duplicate ranges of 4½ inch steel pipes, from both of which connections are made to each boiler. The water is derived from the town's mains, and is stored in a tank forming the roof of the economiser house, and holding 20,000 gallons.

Steam Pipes.—Each boiler delivers into two distinct main ranges, formed of 18 inch steel pipes. These pass into the engine house and run down the middle; both are connected to all engines.

The Engine House is 204 feet × 80 feet, and two 10-ton travelling cranes worked by hand power run along its whole length. The foundations for the engines and dynamos are of solid concrete, 8 feet deep.

The Engines are ten in number, and are of the vertical compound condensing class. Six are 100 IHP, and the cylinders are placed tandem. Leading dimensions: Diameter of high pressure cylinder, 10½in.; diameter of low pressure 16in.; length of stroke, 2 feet; number of revolutions per minute, 120. The remaining four are of 400 IHP. The high and low pressure cylinders are side by side, and the cranks are placed at right angles

to one another on the shaft. Leading dimensions: Diameter of high pressure cylinder, 17in.; diameter of low pressure, 34in.; length of stroke, 3 feet; number of revolutions per minute 78.

Steam is supplied at a pressure of 120lbs. per square inch.

Ejector Condensers are used in all cases, and are supplied with canal water, which is pumped into the tank over the boiler house by two centrifugal pumps.

Dynamos.—Each is driven by a separate engine by link belts, a short drive being secured by the use of jockey pulleys. The six small ones give 590 amperes at 102 volts at 540 revolutions; the four large give 590 amperes at 410 volts at 400 revolutions per minute. All are so arranged that they can be run as motors if desired, in order to start the engines.

Motor Generators.—There are four of these. They will transform 100 amperes from a pressure of 100 volts to the same pressure, and are used when the load is light for transforming the load to one pair of mains, thus enabling one engine to run the whole load.

Switchboards.—All are of the same general design, and are formed entirely of incombustible materials. Vertical and horizontal bars cross one another, and at the points of crossing holes are drilled in both, those in the hinder bars being tapped to receive screw plugs: when these plugs are inserted, electrical connection is established between the bars crossing at the point. The distributor board serves to connect any one of the small dynamos between any pair of distributing mains. For the feeders, two boards are provided, one for each pole, and admit of any large machine being connected to any feeder.

The transformer switchboard enables any machine to be fed from any pair of mains and to deliver into any other pair. A slate board carries all the switches and fuses for the lighting of the station, coal crane, ventilating fans, &c.

Mains.—These are partly of bare copper, supported on porcelain insulators in concrete culverts, and partly of vulcanised india-rubber covered cables drawn into pipes, the former being employed when the number of conductors exceeds five. The length of single conductor now laid is approximately 50 miles. The five distributors form a network extending over the whole district. This network is fed at eight different points by feeders one square inch in section. It is intended eventually to assign one large dynamo to each of these, and the pressure will be varied at the station to give a constant pressure at the far ends of the feeders.

There are at present 39,268 incandescent lamps of 8 c.p. and 256 arc lamps connected to the mains, also 10 motors.

Extensions.—An additional boiler, similar in all respects to those now working, is being fixed; and two additional 400 IHP engines and dynamos identical with the existing ones are ordered, and the foundations for them are ready. A third centrifugal pump for the condensing water, to be driven by an electric motor, will also be put down.

The mains are being rapidly extended in every direction.

C. H. WORDINGHAM. Assoc. M.Inst.C.E.

Engineer.

Hydraulic Power Station.

Hydraulic Power Station is situated in Gloucester Street, on the site of Sharp, Stewart & Co.'s late works, adjoining the Rochdale Canal. The buildings are divided into two blocks, one forming the Engine Room, Boiler House, and Accumulator Tower, whilst the other comprises the General Offices, Show Room, Repairing Shop, and Foreman's residence.

The Engine Room has been designed to accommodate six sets of engines, of which four sets are completed and at work, and the two additional sets, to complete the installation, are now in course of construction.

The Engines are of the inverted, triple expansion, surface condensing type, each engine indicating rather more than 200 HP. The cylinders are 15in., 22in. and 36in. diameter respectively by 24in stroke.

The Three Pumps, which are single acting, are 4½in. diameter by 2 feet stroke, and are driven direct from the piston and crossheads, being fixed between the forks of the connecting rods. The Air, Circulating and Feed Pumps are driven by rocking shafts from the intermediate cylinder crosshead, and arrangements have been made so that in the event of a breakdown of any of these pumps, or mishap to the condenser, the exhaust steam from the low pressure cylinder can at once be diverted from the condenser, and discharged into the atmosphere.

Steam is supplied by five steel Lancashire Boilers, 30 feet long by 7 feet 6 inches diameter, the working pressure being 120 lbs. per square inch. The boilers are fitted with Vicar's mechanical stokers, which are driven by Brotherhood's three-cylinder hydraulic motors. These motors also drive shafting, &c., for working two large economizers, and the machinery for elevating and conveying the coal from the store, which is situated at the back of the boilers, adjoining the canal, to the hoppers in connection with the stokers. On the top of the boiler house, a capacious cast iron tank is fixed, divided into three separate compartments. This tank is filled from the ordinary town's water mains, and from it the water is drawn by the Main pumps and forced into the mains, under the pressure above described.

The circulating water, for condensing purposes, is also drawn from and returned to this tank, so that in winter the temperature of the water in the tanks can be easily maintained at about 50 degrees Fahrenheit.

There are two Accumulators, each with rams 18 inches diameter by 23 feet stroke, the maximum working pressure being 1,120 lbs. per square inch. Up to the present time about ten miles of hydraulic mains have been laid throughout the business area of the City, and although power has only been available since the 1st February of the current year, agreements have already been signed for the supply of power to about 270 machines; comprising passenger elevators, goods hoists, Cranes, Presses, Intensifiers, &c.

Power is maintained continuously by day and night including Sundays, and is charged for according to quantity consumed, as measured by meters, the cost of lifting or pressing thus being in direct proportion to the work executed.

The whole of the works have been designed and executed under the supervision of Mr. Corbet Woodall, Consulting Engineer, Westminster.

F. M. EVANSON, *Engineer.*

YORK
MAC L
BOX AND
FOUNDATIONS
B L

THE MANCHESTER ASSOCIATION
ESTABLISHED
18